Delfield

N8200-ST

Drop-In Self-Contained Sheet Pan Frost Top

Project _____

Item _____

Quantity _____

CSI Section 11400

Approved _____

Date _____

N8200-ST: Drop-In Self-Contained Frost Top

Models

- N8230-ST 30″ length self-contained frost top - holds 1 sheet pan
- N8240-ST 40″ length self-contained frost top - holds 2 sheet pans (tall left to right)
- N8256-ST 56″ length self-contained frost top - holds 2 sheet pans (long left to right)
- N8258-ST 58″ length self-contained frost top - holds 3 sheet pans (tall left to right)
- N8275-ST 75″ length self-contained frost top - holds 4 sheet pans (tall left to right)

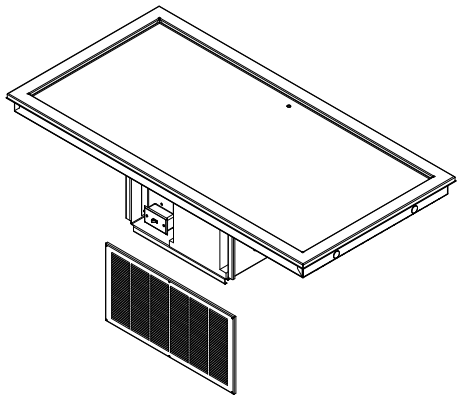

N8258-ST

Standard Features

- Polyurethane foam insulation
- On/off switch
- Environmentally friendly HFC-404A refrigerant
- Stainless steel louver provided
- Push-in perimeter gasket

Options & Accessories

- Single or double service flip-up sneezeguards
- Relocate compressor
- 220V/50 cycle electrical system*

* *Inclusion of this option will alter electrical specifications of the unit*

Specifications

Top is one-piece, heavy-gauge stainless steel. Top is recessed .75″ (1.9cm) above counter surface. Refrigeration lines are secured to the underside of the top and insulated with high-density, environmentally friendly, Kyoto Protocol Compliant, Non ODP (Ozone Depletion Potential), Non GWP (Global Warming Potential) closed-cell polyurethane. Exterior housing is heavy-gauge galvanized steel.

Condensing unit is suspended below the frost top on a heavy-gauge steel frame. Condensing unit uses HFC-404a refrigerant. Unit has an ON/OFF toggle switch, an 8′ (2.4m) cord and NEMA 5-15 plug. Unit has (1) stainless steel louver provided for field installation; cutout dimensions are 12.00″ x 23.50″ (30cm x 60cm). A second opening at the rear of the cabinet must be provided at installation to allow for proper air circulation.

404A REFRIGERANT

980 S. Isabella Rd.
Mt. Pleasant, Michigan 48858

Phone: 800-733-8948 or 989-773-7981
Fax: 800-669-0619

www.delfield.com

Manitowoc

Delfield

N8200-ST

Drop-In Self-Contained Sheet Pan Frost Top

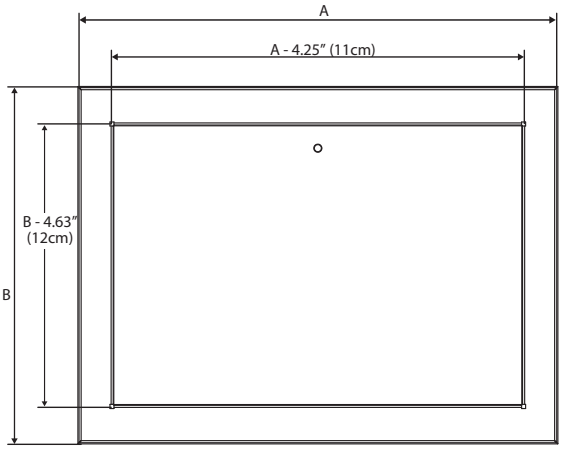

Plan View
N8200-ST Models

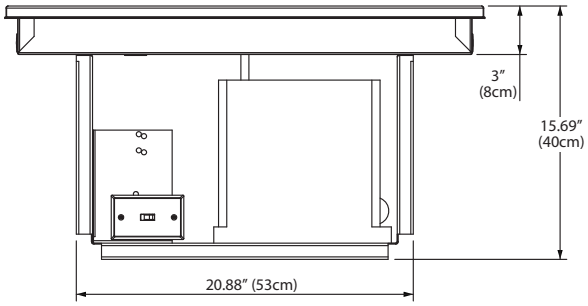

Elevation View
N8200-ST Models

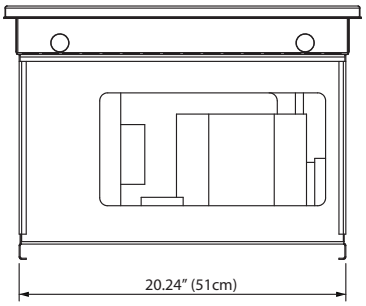

Right End View
N8200-ST Models

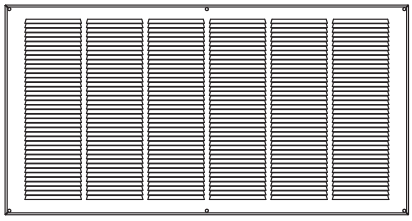

Specifications

Model	Length (A) Dimension	Width (B) Dimension	Counter Cutout Dimension	V/Hz/Ph	H.P.	Amps	Ship Weight
N8230-ST	29.60" (75cm)	22" (56cm)	28.60" x 21.10" (73cm x 54cm)	115/60/1	1/4	7.5	142lbs/64kg
N8240-ST	39.70" (101cm)	29.60" (75cm)	38.65" x 28.75" (98cm x 73cm)	115/60/1	1/4	7.5	168lbs/76kg
N8256-ST	55.60" (141cm)	22" (56cm)	54.60" x 21.10" (139cm x 54cm)	115/60/1	1/4	7.5	193lbs/88kg
N8258-ST	57.60" (146cm)	29.60" (75cm)	56.60" x 28.75" (144cm x 73cm)	115/60/1	1/4	7.5	209lbs/95kg
N8275-ST	75.50" (192cm)	29.60" (75cm)	74.50" x 28.75" (189cm x 73cm)	115/60/1	1/4	7.5	239lbs/108kg

Delfield reserves the right to make changes to the design or specifications without prior notice.

980 S. Isabella Rd.
Mt. Pleasant, Michigan 48858

Phone: 800-733-8948 or 989-773-7981
Fax: 800-669-0619
www.delfield.com

Printed in the U.S.A.
5336-DSN8200ST
04/14

Manitowoc