Shelleyglas™ by Delfield

KCFM

Mobile Milk and Ice Cream Counters

Project _____

Item _____

Quantity _____

CSI Section 11400

Approved _____

Date _____

KCFM: Mobile Milk and Ice Cream Counters

Models

- KCFM-50 - 50" milk and ice cream counter with 126 carton or 210 cup capacity
- KCFM-74 - 74" milk and ice cream counter with 252 carton or 420 cup capacity

KCFM-50

Standard Features

- One piece, molded fiberglass pylon (base), fully rounded corners, permanent color
- All corners and center sides reinforced with galvanized bracing, laminated into the fiberglass
- Fire Code rating on fiberglass, laminate, canopy materials
- 5" diameter polyurethane swivel casters
- A maximum 10' long cord and plug
- Top has die stamped openings and is provided with hinged stainless steel removable lids
- Watertight inner liner has radius corners for easy cleaning
- Equipped with a drain plumbed to a drain valve
- Refrigerated compartment is equipped with automatic self-leveling, field adjustable elevators
- Divider trays are supplied
- One year parts and 90 day labor standard warranty

Options & Accessories

- Stainless steel fold-down tray slide
- Three-bar fold-down tray slide
- S/S fold-down work shelf
- Line-up interlock device
- Chrome wire baskets, 10" x 17" x 4" (25cm x 43cm x 10cm)
- Stainless steel lid locking device with keyed lock
- Stainless steel end drop shelf
- Molded fiberglass trim strips
- 6" (15cm) high adjustable stainless steel legs in lieu of casters

Specifications

Exterior Body is seamless, one-piece molded fiberglass, having perfectly smooth exterior surface with all corners fully rounded. The fiberglass reinforced polyester (F.R.P.) is molded with permanent color. Stress points are internally reinforced.

Exterior top is constructed of stainless steel, welded, ground and polished into one integral unit. Top is fabricated with square exterior corners. Top has two die-stamped openings and is provided with hinged removable lids. Lids are constructed of stainless steel and have a rubber gasket seal.

Refrigerated and Freezer Compartments; unit has one refrigerated and one freezer compartment each. Compartments have water-tight inner liner constructed of stainless steel, with radius corners and 1.5" (4cm) of environmentally friendly, Kyoto Protocol Compliant, Non ODP (Ozone Depletion Potential), Non GWP (Global Warming Potential) polyurethane insulation. Both compartments are equipped with a drain plumbed to a drain valve located in the bottom of the unit. Refrigerated and freezer compartments are equipped with automatic self leveling, field adjustable elevators. Divider trays are supplied.

Refrigeration; copper refrigeration coils are attached to outside of inner liner. Unit is refrigerated by self-contained, 115 volt, 60 Hertz, single phase hermetically sealed condensing unit with thermostatic control. Unit is wired with a 3-wire, grounded, maximum 10' (3m) 120 volt cord and plug.

Casters; unit is mounted on 5" (13cm) diameter swivel casters with non-marking polyolefin tires and plate brakes. Overall height of caster assembly is 6" (15cm).

134a REFRIGERANT

980 S. Isabella Rd.
Mt. Pleasant, Michigan 48858

Phone: 800-733-8948 or 989-773-7981
Fax: 800-669-0619

www.delfield.com

Manitowoc

Shelleyglas ™
by Delfield

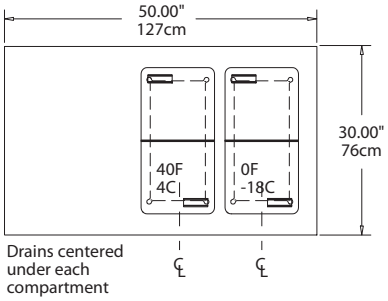

Plan View
KCFM-50

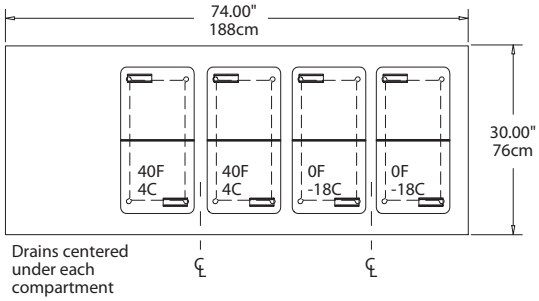

Plan View
KCFM-74

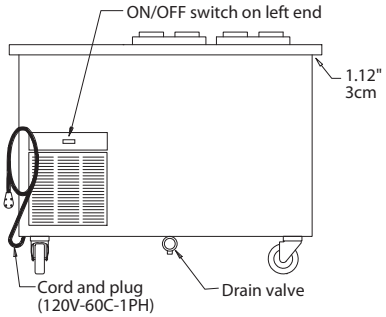

Elevation View
KCFM-50

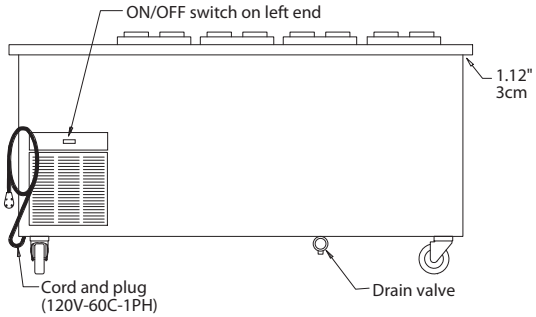

Elevation View
KCFM-74

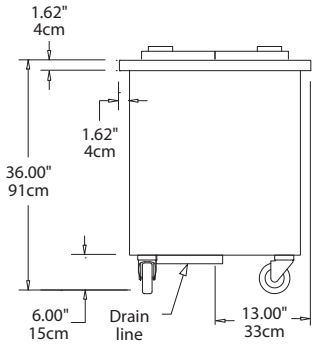

End View
All Models

Mobile Milk and Ice Cream Counters

KCFM

Specifications							
Model	Milk Capacity*	Ice Cream Capacity**	H.P.	V/Hz/Ph	Amps	Nema Plug	Ship Weight
KCFM-50	126	210	1/4	120/60/1	7.1	5-15P	500lbs / 227kg
KCFM-74	252	420	1/3	120/60/1	8.0	5-15P	590lbs / 268kg

*Based on 0.5 pint (237mil), 2.75" x 2.75" (7cm x 7cm) gable top cartons.
**Based on 3 oz. (85g), 3" (7.6cm) diameter cups.

Delfield reserves the right to make changes to the design or specifications without prior notice.

980 S. Isabella Rd.
Mt. Pleasant, Michigan 48858

Phone: 800-733-8948 or 989-773-7981
Fax: 800-669-0619
www.delfield.com

Printed in the U.S.A.
DSKCFM
07/12

Manitowoc