Delfield

FlexiShield® Food Shields

Single Tier, Fixed Sneeze Guard Front, Dual Service

Project _____

Item _____

Quantity _____

CSI Section 11400

Approved _____

Date _____

Models

- DCFSKD Available in 1" increments up to 120" long

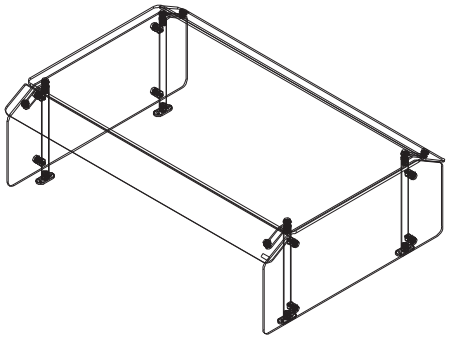

DCFSKD

Standard Features

- Mostly glass display allows you to see product from every angle
- 1" stainless steel legs
- Meets 2011 NSF requirements
- Flange mounted foot makes installation easy
- Comes fully assembled from the factory
- Standard end glass
- One year parts and labor standard warranty

Options & Accessories

- Radiant heat lamp*
- Slim line heat lamp*
- Stainless steel shelf
- Black powder coat
- Fluorescent light*
- LED lights*
- Narrow halogen heatlamp*
- Narrow halogen heatlamp with xenon lights*
- Narrow xenon display lights*

* Inclusion of this option will alter the electrical specifications of the unit

Specifications

1" stainless steel legs and flanged feet are standard. Models 52.50" (133cm) in length and less will have two sets of legs. Models greater than 52.50" (133cm) in length will have three sets of legs. Top glass is 3/8" tempered. End glass is 1/4" tempered. Front glass is 1/4" tempered. Chrome plated hardware standard.

980 S. Isabella Rd.
Mt. Pleasant, Michigan 48858

Phone: 800-733-8948 or 989-773-7981
Fax: 800-669-0619

www.delfield.com

Manitowoc

Delfield

FlexiShield® Food Shields

Single Tier, Fixed Sneeze Guard Front, Dual Service

Models 52.50" (133cm) in length and less will have two sets of legs.
Models greater than 52.50" (133cm) in length will have three sets of legs.

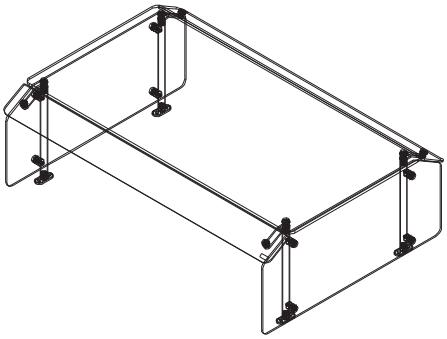

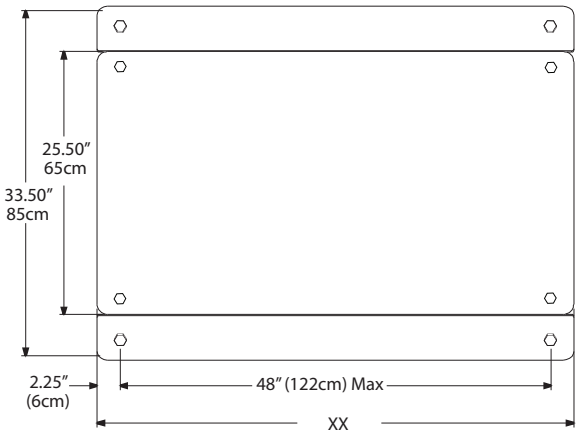

Plan View

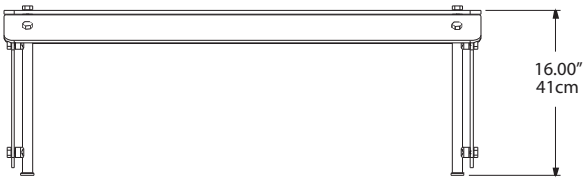

Elevation View

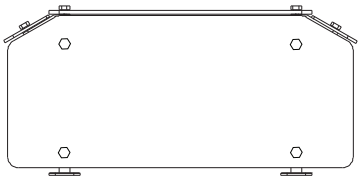

Side View

Specifications				
Model	L	W	H	Ship Weight
DCFSKD	XX	33.50" (85cm)	16.00" (41cm)	Contact factory

Delfield reserves the right to make changes to the design or specifications without prior notice.

980 S. Isabella Rd.
Mt. Pleasant, Michigan 48858

Phone: 800-733-8948 or 989-773-7981
Fax: 800-669-0619
www.delfield.com

Printed in the U.S.A.
DSDCFSKD
09/11

Manitowoc