Delfield

409 Stacking Collar

For Use With Models 406 & 407

Project _____

Item _____

Quantity _____

CSI Section 11400

Approved _____

Date _____

Models

- 409 - Stacking collar for use with models 406 & 407

Models 406, 407 & 409

Standard Features

- Constructed with 22 gauge stainless steel
- Adds 4" to overall combined height
- Allows 406 & 407 units to be stacked

409 Stacking Collar: For Use With Models 406 & 407

980 S. Isabella Rd.
Mt. Pleasant, Michigan 48858

Phone: 800-733-8948 or 989-773-7981
Fax: 800-669-0619

www.delfield.com

Manitowoc

409 Stacking Collar

For Use With Models 406 & 407

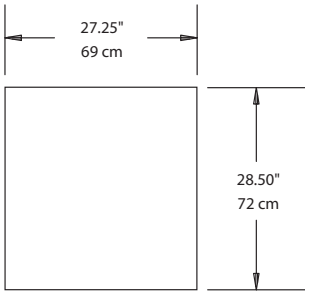

Plan View

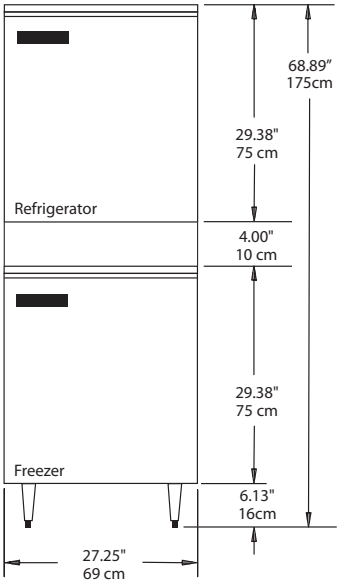

Elevation View

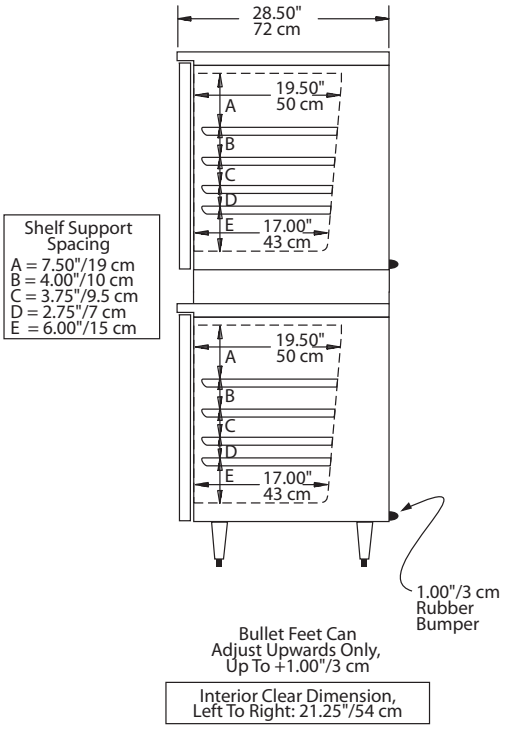

Right End View

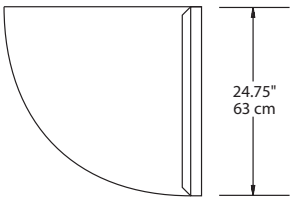

Right Door Hinging

Door Clearance Detail

Installation Note For All Models:
Refrigeration system is designed so that air will flow under the unit, through the compressor area, and out the top rear of the unit. Any restriction to this air flow path will void the warranties.

Specifications

Model	V/Hz/Ph	Amps	Volume	Shelf Area	H.P.	Ship Weight	NEMA Plug	Energy KWH/Day
406	115/60/1	4.0	5.7ft^3	4.6ft^2	1/5	176lbs (80kg)	5-15P	1.88
407	115/60/1	5.8	5.7ft^3	4.6ft^2	1/5	176lbs (80kg)	5-15P	2.53

Delfield reserves the right to make changes to the design or specifications without prior notice.

980 S. Isabella Rd.
Mt. Pleasant, Michigan 48858

Phone: 800-733-8948 or 989-773-7981
Fax: 800-669-0619
www.delfield.com

Printed in the U.S.A.
DA409
08/11