Delfield

200 Series

Ice Chest With Cover

Project _____

Item _____

Quantity _____

CSI Section 11400

Approved _____

Date _____

200 Series Ice Chest With Cover

Models

- 240 Ice chest with cover

240

Standard Features

- 20-gauge stainless steel top and body
- One piece stainless lift off cover with handle
- Stainless steel interior liner with coved corners
- 1″ diameter drain plumbed out the bottom
- High density environmentally friendly, Kyoto Protocol Compliant, Non ODP (Ozone Depletion Potential), Non GWP (Global Warming Potential) polyurethane foam throughout unit
- Unit can be attached to the front of a counter with brackets (not included)
- One year parts and 90 day labor standard warranty. Additional warranties available.

Specifications

Top is 20-gauge stainless steel. Top has 6.5″ x 15.75″ (16.5cm x 40cm) stamped opening, with a one-piece lift-off cover of 20-gauge stainless steel.

Sides and front are 20-gauge stainless steel.

Back and bottom are 24-gauge galvanized steel.

Ice bin is 22-gauge stainless steel, has coved corners and is pitched to 1″ (2.54cm) diameter drain opening. Insulated all around — top, sides, front, back, and bottom — with high-density closed-cell environmentally friendly, Kyoto Protocol Compliant, Non ODP (Ozone Depletion Potential), Non GWP (Global Warming Potential) polyurethane. Bin holds 75 pounds of flaked ice.

NSF®

980 S. Isabella Rd.
Mt. Pleasant, Michigan 48858

Phone: 800-733-8948 or 989-773-7981
Fax: 800-669-0619

www.delfield.com

Manitowoc

Delfield

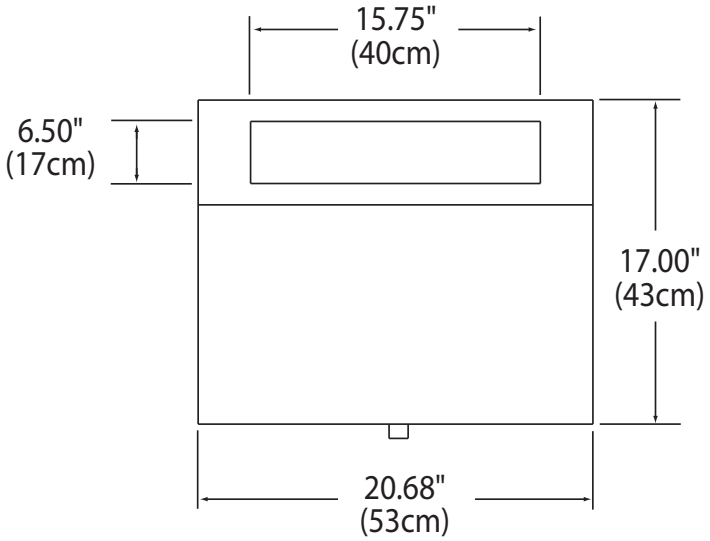

Elevation View

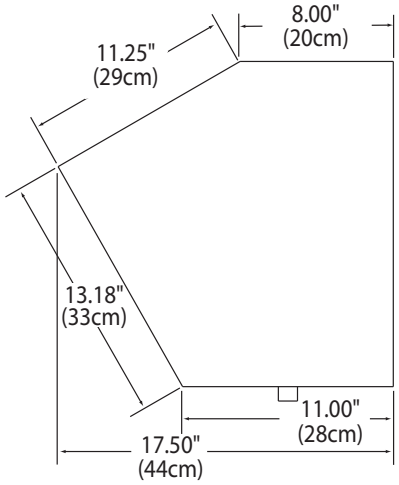

Side View

200 Series Ice Chest With Cover

Specifications						
Model	L	W	D	Ice Capacity	Ship Weight	Freight Class
240	21″ (53.3cm)	17.5″ (44.5cm)	17″ (43.2cm)	75lbs/ 34.0kg	36lbs/ 16.3kg	85

Delfield reserves the right to make changes to the design or specifications without prior notice.

980 S. Isabella Rd.
Mt. Pleasant, Michigan 48858

Phone: 800-733-8948 or 989-773-7981
Fax: 800-669-0619
www.delfield.com

Printed in the U.S.A.
DS240
07/11

Manitowoc