ST4532N Flat Top

Front-Breathing Self-Contained Flat Top Freezer Bases

Project _____

Item _____

Quantity _____

CSI Section 11400

Approved _____

Date _____

ST4532N Flat Top: Front-Breathing Self-Contained Flat Top Freezer Bases

Models

- ST4532N Single section freezer with doors
- STD4532N Single section freezer with drawers

ST4532N

Standard Features

- 100% front breathing, which allows the unit to be pushed against a wall or built into a cabinet or an existing line up
- Durable, rugged stainless steel sides, top and front
- Features Delfield's exclusive ABS interior (on sides). ABS is extremely durable - it won't dent, chip or corrode and is backed by a limited lifetime warranty
- Heavy duty self-closing hinges
- "ST" prefix models have a 4" stainless steel backsplash
- "D" prefix models feature Delfield's exclusive new drawer system. Drawers are backed by a 10-year warranty on the track assembly
- Environmentally friendly R404A refrigerant
- High density foamed in place environmentally friendly, Kyoto Protocol Compliant, Non ODP (Ozone Depletion Potential), Non GWP (Global Warming Potential) polyurethane keeps energy costs low
- Black recessed quick grip handle
- Standard on 5" casters for easy cleaning and installation
- 60-cycle single phase electrical system
- 6' cord and plug supplied
- One epoxy coated wire shelf standard, installed per door section
- Electronic control
- Three year parts and labor warranty and an additional two year compressor parts warranty

Options & Accessories

- 18" wide single tier overshelf
- Stainless steel finish on back
- Plastic laminate on front
- Additional wire shelves
- 3" casters, 3.75" ride height
- Door lock (solid door models only)
- Exterior thermometer (solid door models only)
- Interior lights
- 220V/50 Hertz electrical system*

* *Inclusion of this option will alter electrical specifications of the unit*

Specifications

Exterior top is one-piece, 22-gauge stainless steel with integral 2.12" (5.4cm) square nosing on the front. The backsplash is full width and 4" (10cm) tall.

Exterior back and bottom are two-piece 24-gauge galvanized steel. Exterior ends are stainless steel.

Interior sides are thermoformed ABS plastic with shelves supported on plugs. Interior back is one-piece 22-gauge stainless steel. Interior bottoms are thermofoamed ABS plastic. Base is fully insulated with high-density foamed in place environmentally friendly, Kyoto Protocol Compliant, Non ODP (Ozone Depletion Potential), Non GWP (Global Warming Potential) polyurethane.

Refrigeration system uses HFC-404A refrigerant. Compressor, condenser coil and hot gas condensate evaporator are mounted on rear of the cabinet. Evaporator coil is located on the interior rear wall of the cabinet. Refrigerant flow is controlled by a TXV. Cabinet maintains an interior cabinet temperature of -5°F to 0°F (-21°C to -18°C).

Electronic control is located on the exterior back of the cabinet. It allows the unit to maintain consistent temperatures in heavy duty conditions.

Electrical connection is 115 volt, 60 Hertz, single phase. Unit has a 6' (1.8m) long electrical cord and NEMA 5-15P plug.

Casters: Equipment is mounted on 5" (13cm) diameter plate casters with front two locking. Equipment clearance above the floor is 2.5" (6cm).

Door has a 24-gauge stainless steel exterior, with thermoformed ABS plastic interior liner.

Drawers have 24-gauge stainless steel exterior with thermoformed ABS plastic interior liner. Drawer frames are 12-gauge stainless steel. Drawer slides are 11-gauge stainless steel with Delrin bearings. Top drawer holds two full size 12" x 20" (30.5cm x 50.8cm), 4"-6" x (10.2cm-15.2cm) deep pans. Bottom drawer holds two full size 12 x 20", 4" deep pans. Pans are supplied by others.

404A REFRIGERANT

980 S. Isabella Rd.
Mt. Pleasant, Michigan 48858

Phone: 800-733-8948 or 989-773-7981
Fax: 800-669-0619

www.delfield.com

Delfield

ST4532N Flat Top

Front-Breathing Self-Contained Flat Top Freezer Bases

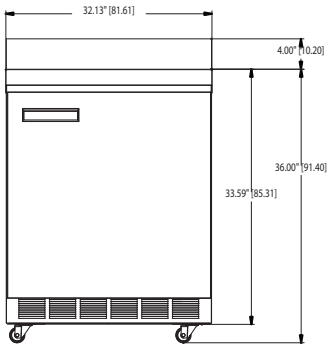

ST4532N Elevation View

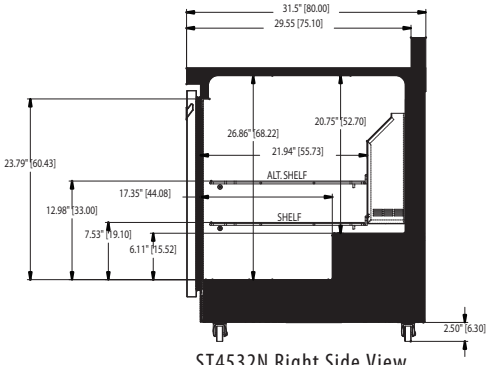

ST4532N Right Side View

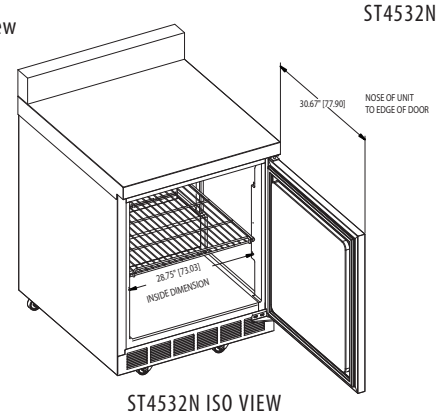

ST4532N ISO VIEW

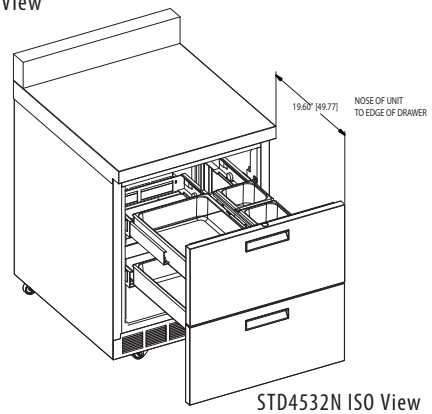

STD4532N ISO View

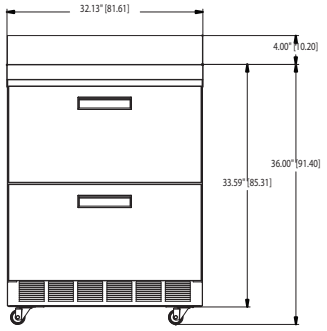

STD4532N Elevation View

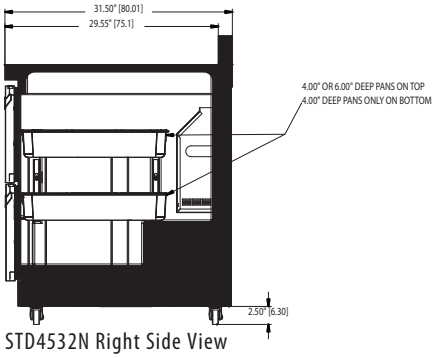

STD4532N Right Side View

INSTALLATION NOTE:
Refrigeration system is designed so that air will flow under the unit, through the compressor area and out the front of the unit. Any restriction to this air flow path will void the warranties.

PLEASE NOTE:
Air flow through the louver on the back of the unit is not necessary for operation, however, any air which passes through the louver is beneficial.

Specifications

Model	# of Shelves	Shelf Area	Volume	H.P.	V/Hz/Ph	Amps	Nema Plug	Ship Weight
ST4532N	1	3.88ft^2	8.80ft^3	1/5	115/60/1	9.5	5-15P	245lbs/111kg
STD4532N	NA	NA	8.80ft^3	1/3	115/60/1	9.5	5-15P	293lbs/133kg

Delfield reserves the right to make changes to the design or specifications without prior notice.

980 S. Isabella Rd.
Mt. Pleasant, Michigan 48858

Phone: 800-733-8948 or 989-773-7981
Fax: 800-669-0619
www.delfield.com

Printed in the U.S.A.
DSST4532N
03/13

Manitowoc