Shelleybasic™ by Delfield

SE-CS/SES-CS

Mobile Cashier Counters

Project _____

Item _____

Quantity _____

CSI Section 11400

Approved _____

Date _____

SE-CS/SES-CS: Mobile Cashier Counters

Models

- SE-CS 36″ height mobile cashier counter
- SES-CS 30″ height mobile cashier counter

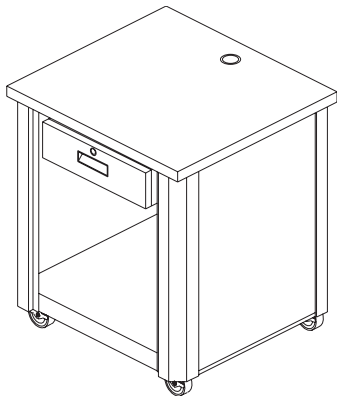

SES-CS

Standard Features

- Locking stainless steel cash drawer, stainless steel shelf and 5″ (13cm) diameter swivel, locking casters
- 3″ (8cm) grommet hole supplied in top rear for electrical cords
- 16 gauge stainless steel top, welded, ground and polished into one integral unit
- Standard with Delfield's exclusive Delrite™ ABS or laminated modesty panels in front and ends of unit
- Black laminate backs each modesty panel (laminated panels only)
- SES-CS models are 30″ (76cm) high overall
- SE-CS models are 36″ (91cm) high overall
- One year parts and 90 day labor standard warranty

Options & Accessories

- Tray slide
- Cutting board
- 8" (20cm) stainless steel fold-down work shelf
- Interlock device
- 115/15A outlet
- End drop shelf
- Adjustable stainless steel leg
- Ferruled hole - 1″ (3cm) diameter

Specifications

Exterior Body: Open frame construction with 16-gauge stainless steel corners: 16-gauge stainless steel full bottom shelf and stainless steel C channel front and sides for optional accent panels.

Exterior Top: Constructed of 16-gauge stainless steel, welded, ground and polished into one integral unit. Top is fabricated with square exterior corners and a 2″ diameter ferruled hole supplied in top rear for electrical cords.

Casters: Units are mounted on 5″ (13cm) diameter swivel casters with non-marking polyolefin tires and plate brakes. Overall height of caster assembly is 6″ (15cm).

NSF®

980 S. Isabella Rd.
Mt. Pleasant, Michigan 48858

Phone: 800-733-8948 or 989-773-7981
Fax: 800-669-0619

www.delfield.com

Manitowoc

Shelleybasic™
by Delfield

Mobile Cashier Counters

SE-CS/SES-CS

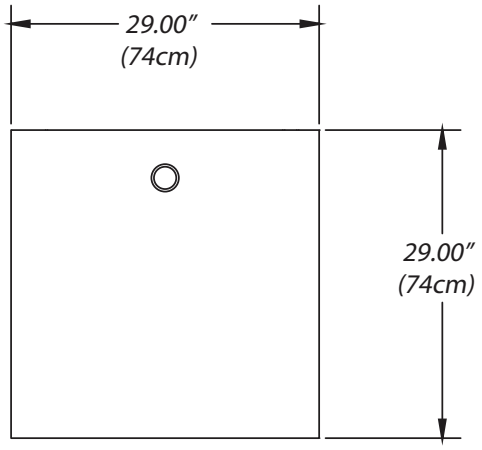

Plan View
SE-CS

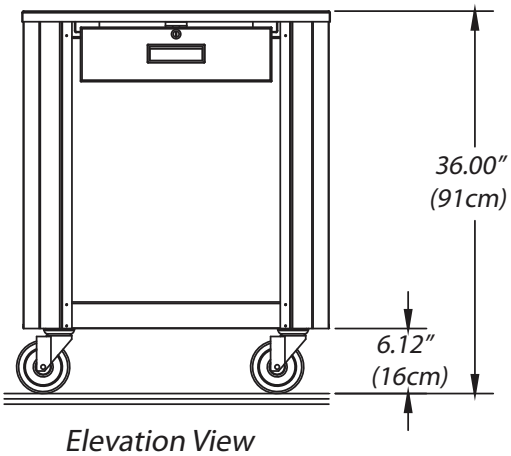

Elevation View
SE-CS

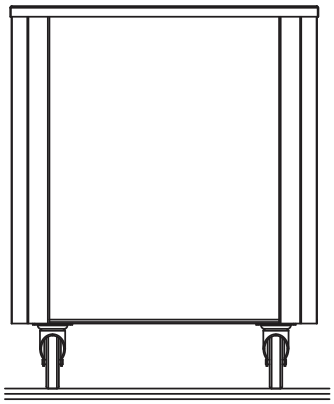

End View
SE-CS

Specifications				
Model	Length	Depth	Height	Ship Weight
SE-CS	29.00″ (74cm)	29.00″ (74cm)	36.00″ (91cm)	170lbs/77kg
SES-CS	29.00″ (74cm)	29.00″ (74cm)	30.00″ (76cm)	170lbs/77kg

Delfield reserves the right to make changes to the design or specifications without prior notice.

980 S. Isabella Rd.
Mt. Pleasant, Michigan 48858

Phone: 800-733-8948 or 989-773-7981
Fax: 800-669-0619
www.delfield.com

Printed in the U.S.A.
DSCS
11/12

Manitowoc