Delfield

Concepts™ Serving Systems

Radial Heated Serving Counter

Project _____

Item _____

Quantity _____

CSI Section 11400

Approved _____

Date _____

Models

- DCRU-H2 Radial heated serving counter, fits two standard 12"x20" pans
- DCRU-H3 Radial heated serving counter, fits three standard 12"x20" pans
- DCRU-H4 Radial heated serving counter, fits four standard 12"x20" pans
- DCRU-H5 Radial heated serving counter, fits five standard 12"x20" pans

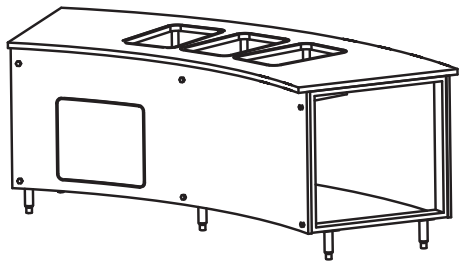

DCRU-H3

Standard Features

- Flush mount die stamped stainless steel heated food well
- 1/2" stainless steel drains
- Heavy duty stainless steel top
- Reinforced stainless steel front and rear removable panels
- Heavy duty base support structure
- Standard on 6" legs
- Must be hard wired in field
- 11.87" x 19.87" single hot food wells are manifolded together to one main gate valve
- Wet and dry operation
- Individual infinite temperature controls mounted behind access door
- One year parts and labor standard warranty

Options & Accessories

- Granite, Hanstone and Solid Surface top materials
- Laminated base panels
- Finished stainless steel or laminated end panels
- Décor panels
- Graphics packages
- FlexiShield® foodshields
- Signage with overstructures, lights and heatlamps*
- Mechanical access doors
- Fixed or adjustable height casters (stand alone units only)
- Kickplates (units with legs only)
- Adapter plates and bars
- Tray slides
- Omit drains
- Fill faucet
- 220V/50 cycle electrical system*
- Energy saving power well (ESP)*

* *Inclusion of this option will alter electrical specifications of the unit*

Specifications

Exterior body is constructed of 0.75" Luan reinforced front and rear panels with 22 gauge stainless steel skin and 1" polyethylene horizontal rib supports. Horizontal brace on rear is constructed of 18 gauge galvanized steel. The exterior ends are unfinished.

Exterior top is constructed of 14 gauge stainless steel. Horizontal top supports on front and rear are constructed with 18 gauge galvanized steel. Top end supports are 12 gauge stainless steel.

Interior base bottom is constructed of 16 gauge galvanized steel. Vertical base support braces are 14 gauge galvanized steel.

Heated food warmers are constructed of die-stamped stainless steel. Heated food warmers are insulated on bottom. Each heated food warmer is individually equipped with a heated element rated at 1000 watts for 120 volt or 208/230 volt, 60 hertz, single phase service and wired to an adjustable control switch and indicator light in the control panel. Warmers are equipped with a 0.5" stainless steel drain plumbed to the drain valve located behind the hinged access door.

Legs: Bases mounted on 6.12" adjustable legs.

Optional Energy Saving Power wells (ESP) are individually equipped with a heated pad on bottom and sides of well rated at 500 watts for 208-230V or 240V. ESP wells provided with individual solid state digital temperature control wired to one main control panel with 4' of conduit and wire. This option reduces energy usage.

980 S. Isabella Rd.
Mt. Pleasant, Michigan 48858

Phone: 800-733-8948 or 989-773-7981
Fax: 800-669-0619

www.delfield.com

Manitowoc

Concepts™ Serving Systems: Radial Heated Serving Counter

Delfield

Concepts™ Serving Systems

Radial Heated Serving Counter

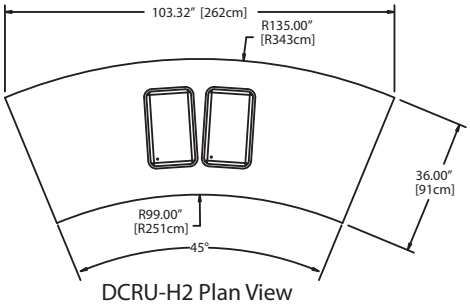

DCRU-H2 Plan View

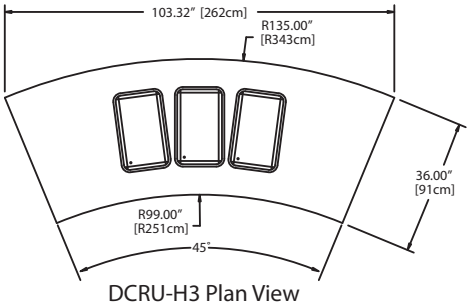

DCRU-H3 Plan View

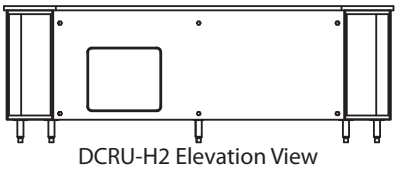

DCRU-H2 Elevation View

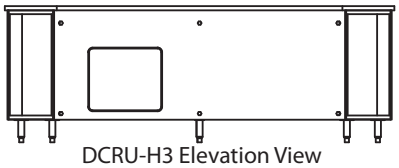

DCRU-H3 Elevation View

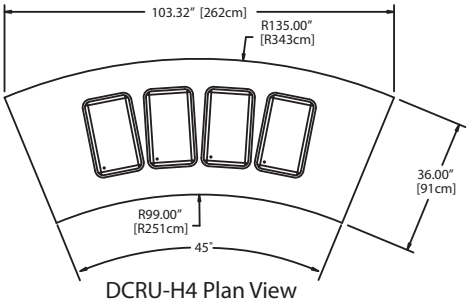

DCRU-H4 Plan View

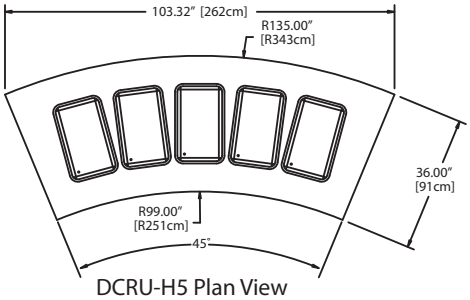

DCRU-H5 Plan View

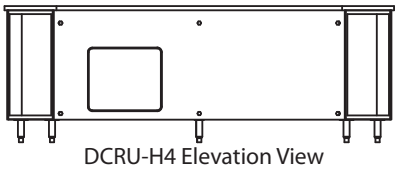

DCRU-H4 Elevation View

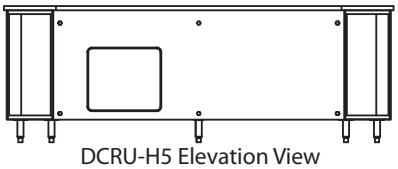

DCRU-H5 Elevation View

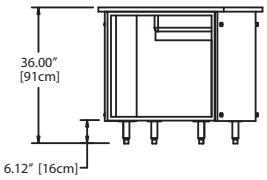

All Models Right Side View

Specifications

Model	Watts	# of 12"x20" Pans Held	V/Hz/Ph	Amps	*Optional ESP Amps (500 watt per well, 208-230V)*	Ship Weight lbs/kg
DCRU-H2	2000	2	115/60/1	16.6	4.8/5.4	563/255
DCRU-H3	3000/4000	3	208-230/60/1	15.0/16.0	7.2/8.1	604/274
DCRU-H4	4000/4800	4	208-230/60/1	20.0/22.0	9.6/10.8	645/293
DCRU-H5	5000/6000	5	208-230/60/1	24.0/27.0	12.0/13.5	685/311

Delfield reserves the right to make changes to the design or specifications without prior notice.

980 S. Isabella Rd.
Mt. Pleasant, Michigan 48858

Phone: 800-733-8948 or 989-773-7981
Fax: 800-669-0619
www.delfield.com

Printed in the U.S.A.
DSDCRUH
06/13

Manitowoc