GoCart

GoCart Mobile Kiosks

Gullwing Non Food

Project _____

Item _____

Quantity _____

CSI Section 11400

Approved _____

Date _____

GoCart Mobile Kiosks - Gullwing Non Food

Models

- NF316 - Gullwing non food mobile kiosk

NF316

Standard Features

- Stainless Steel Construction and Finish
- Gullwing Doors
- Energy Management System
- Drop down Counter Extensions
- Drop down customer service shelf
- 3 Door Storage Cupboard containing Cash Drawer, Removable/Adjustable Shelves
- Lighting – Point of Sale, Point of Purchase, Operator
- Integrated CD, radio and speakers (MP3 playback capability)
- Heavy duty 6" diameter locking casters
- Vinyl night cover
- One year parts and labor standard warranty

Options & Accessories

- Graphics

Specifications

The non food Gullwing has been adapted to suit non food applications. Still equipped with the standard specifications, the non food does not carry the food vending unit which houses the wash sinks, water, waste etc. The non food Gullwing is still used in food service in applications such as packaged food and is also used in a number of other applications such as information desks, merchandisers etc.

The main body, counter top, base, door and frame are constructed of 316 stainless steel. The wings are built of aluminum. The unit is mounted on heavy duty 6" diameter locking casters.

The non food Gullwing's energy management unit features receptacles for the lights, water pump, hot water heater and compact disc player, a 20A receptacle for a coffee machine (provided by others) a duplex 15A receptacle for the optional left upper and lower modules, another duplex 15A receptacle for the optional right upper and lower modules. For additional needs there are two 15A duplex receptacles, 10A combined max, and three 15A duplex receptacles, 11A combined max.

980 S. Isabella Rd.
Mt. Pleasant, Michigan 48858

Phone: 800-733-8948 or 989-773-7981
Fax: 800-669-0619

www.delfield.com

Manitowoc

GoCart

GoCart Mobile Kiosks

Gullwing Non Food

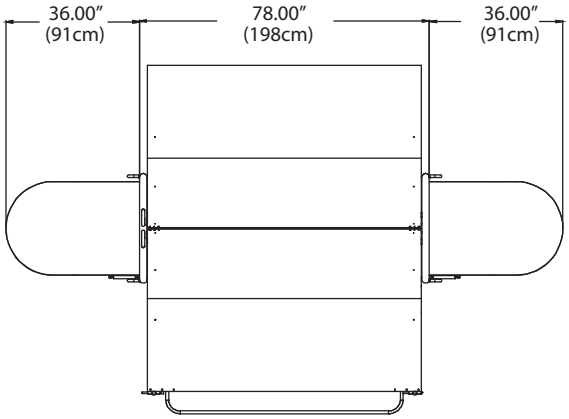

Plan View

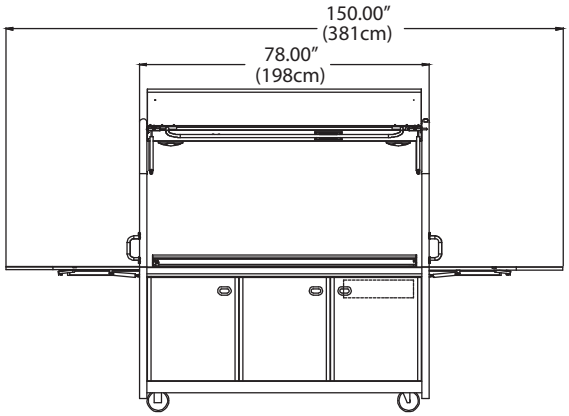

Elevation View

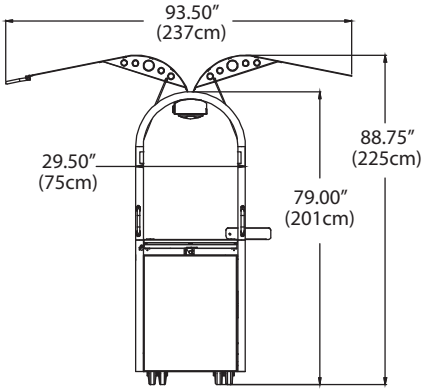

Side View

Specifications					
Model	Electrical	Watts	Amps	Nema Plug	Ship Weight lbs (kg)
NF316	120/240V-60Hz-1Ph	9,600	40.0	14-50P	1346 (611)

Delfield reserves the right to make changes to the design or specifications without prior notice.

980 S. Isabella Rd.
Mt. Pleasant, Michigan 48858

Phone: 800-733-8948 or 989-773-7981
Fax: 800-669-0619
www.delfield.com

Printed in the U.S.A.
DSGCNF
09/11

Manitowoc