Delfield

400 Series

Self-Contained Compact Work Top Refrigerator/Freezer

Project _____

Item _____

Quantity _____

CSI Section 11400

Approved _____

Date _____

Models

- 402 Single section refrigerator
- 403 Single section freezer

402

Standard Features

- Features Delfield's exclusive ABS interior. ABS is extremely durable - it won't dent, chip or corrode and is backed by a limited lifetime warranty
- Stainless steel front, sides and top
- Two epoxy coated wire shelves, standard installed per unit
- Environmentally friendly R404A refrigerant
- Foamed in place environmentally friendly, Kyoto Protocol Compliant, Non ODP (Ozone Depletion Potential), Non GWP (Global Warming Potential) polyurethane cuts energy costs
- Black recessed quick grip handle
- Rugged 6" high heavy duty metal legs
- Door hinging available on either right or left, right side is standard
- 60-cycle single phase electrical system
- 6' cord and plug supplied
- Three year parts and labor warranty and an additional two year compressor parts warranty

Options & Accessories

- Stainless steel back
- Plastic laminate on front
- Additional wire shelves
- Stainless steel single-tier overshelf
- 3" (8cm) diameter casters
- 5" (12.7 cm) diameter casters
- Door lock (original order only; not field installable; per door)
- Full-size composite-type cutting top
- 220 volt, 50 Hertz electrical system*

* *This option will alter the unit's electrical specifications*

Specifications

Exterior bottom shall be heavy-gauge galvanized metal. Exterior ends shall be heavy-gauge stainless steel.

Exterior top: One-piece, 22-gauge stainless steel with front edge turned down to form nosing and rear edge turned up to form a 2" (5.1 cm) thick by 4" (10.2 cm) high backsplash.

Base interior: One-piece thermoformed ABS plastic material, with integral shelf supports. Base shall be fully insulated with high-density foamed-in-place environmentally friendly, Kyoto Protocol Compliant, Non ODP (Ozone Depletion Potential), Non GWP (Global Warming Potential) polyurethane.

Door shall have a heavy-gauge stainless steel exterior, with a thermoformed ABS plastic interior liner, and shall be fully insulated with foamed-in-place polyurethane. Door handles shall be black, recessed ABS. Cabinet shall have (2) adjustable epoxy-coated wire shelves installed.

Equipment shall be mounted on 6" (15.2 cm) high metal legs with black enamel finish.

Electrical Connections: 115 volt, 60 Hertz, single phase. Unit shall have a 6' (1.8 m) long electrical cord and NEMA 5-15P plug. Cord and plug shall be located on the rear of the cabinet 16" (40.6cm) above floor, 5" from left side.

Model 402 Refrigerators Only: Refrigeration system shall use HFC-404A refrigerant. Compressor shall be 1/5 h.p., with condenser coil and hot gas condensate evaporator mounted on rear of cabinet. Evaporator coil and temperature control shall be mounted on the interior rear wall of the cabinet. Refrigerant flow shall be controlled by a capillary tube. Cabinet shall maintain 36°F to 40°F (2°C to 4°C) interior cabinet temperature.

Model 403 Freezers Only: Refrigeration system shall use HFC-404A refrigerant. Compressor shall be 1/5 h.p., with condenser coil, temperature control and hot gas condensate evaporator mounted on rear of cabinet. Evaporator coil shall be mounted on the interior rear wall of the cabinet. Refrigerant flow shall be controlled by a capillary tube. Cabinet shall maintain -5°F to 0°F (-21°C to -18°C) interior cabinet temperature.

System is controlled using Delfield's ACT-Advanced Control Technology electronic temperature control, which provides improved pull down times, reduces compressor cycling and longer compressor life with lower energy consumption.

404A REFRIGERANT

ENERGY STAR

980 S. Isabella Rd.
Mt. Pleasant, Michigan 48858

Phone: 800-733-8948 or 989-773-7981
Fax: 800-669-0619

www.delfield.com

Manitowoc

Delfield

400 Series

Self-Contained Compact Work Top Refrigerator/Freezer

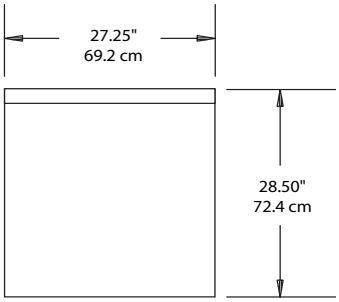

Plan View
402/403

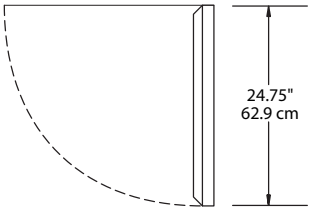

Standard door hinging is on right
Hinging may be reversed
But a new door is required

Door Clearance Detail
402/403

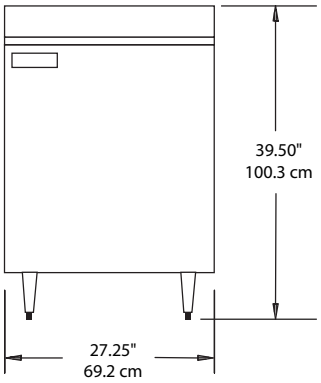

Elevation View
402/403

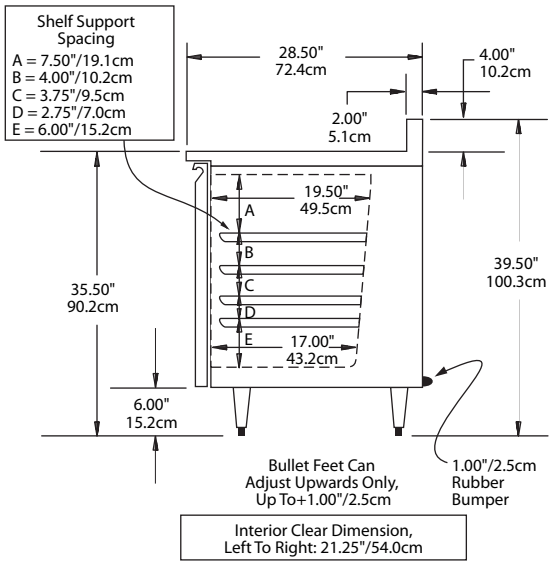

Right End View
402/403

INSTALLATION NOTE:
Refrigeration system is designed so that air will flow under the unit, through the compressor area and out the top rear of the unit. Any restriction to this air flow path will void the warranties.

Specifications

Model	# of Shelves	Shelf Area	Volume	H.P.	V/Hz/Ph	Amps	Nema Plug	Ship Weight	Energy (KWH/Day)
402	2	4.6ft^2	5.7ft^3	1/5	115/60/1	4.0	5-15P	176lbs (80kg)	1.88
403	2	4.6ft^2	5.7ft^3	1/5	115/60/1	5.8	5-15P	184lbs (83kg)	2.53

Delfield reserves the right to make changes to the design or specifications without prior notice.

980 S. Isabella Rd.
Mt. Pleasant, Michigan 48858

Phone: 800-733-8948 or 989-773-7981
Fax: 800-669-0619
www.delfield.com

Printed in the U.S.A.
DS402_403
03/13

Manitowoc