Delfield

Production Centers

Pasta Production Center

Project _____

Item _____

Quantity _____

CSI Section 11400

Approved _____

Date _____

Production Centers: Pasta Production Center

Models

- F18RC93-BPL - 93" pasta station with refrigerated base, liquitec cold pan, built-in induction wok cookers, rethermalizers, sauce warmer and utility bin

F18RC93-BPL

Standard Features

- Self contained refrigerated base with heavy duty drawers
- Drawers are backed by a 10-year warranty on the track assembly
- Self contained liquitec cold pan
- Built-in wok style induction cooker
- Two pasta rethermalizers
- Sauce warmer, sized for 1/3 pan
- Utility bin, sized for 1/3 pan
- Environmentally friendly R404A refrigerant
- Adapter bars for drawers provided
- Mounted on casters for easy cleaning and installation
- High density foamed in place environmentally friendly, Kyoto Protocol Compliant, Non ODP (Ozone Depletion Potential), Non GWP (Global Warming Potential) polyurethane keeps energy costs low
- One year parts and labor, five year compressor standard warranty

Specifications

Exterior top is one-piece, 14-gauge stainless steel, with integral 2.12" (5.4cm) high square nosing on front. Top has a self contained Liquitec® cold pan. It also features four built-in wok style induction cooker, two pasta rethermalizers, a sauce warmer (sized for 1/3 pan) and utility bin (sized for 1/3 pan). Cold pan top opening temperature to maintain 33°F (1°C) to 41°F (5°C) at 86° ambient room temperature, meeting NSF7 certification.

Exterior Back is 18-gauge galvanized steel. Exterior ends are finished with 22-gauge stainless steel.

Base Interior has 22-gauge stainless steel back and bottom. Refrigerated base interior ends and door frames are thermoformed ABS plastic. Base is insulated with 1.5" (3.8cm) high density foamed in place environmentally friendly, Kyoto Protocol Compliant, Non ODP (Ozone Depletion Potential), Non GWP (Global Warming Potential) polyurethane.

Drawers have a 22-gauge stainless steel exterior with thermoformed ABS plastic interior liner. Drawer frames are 12-gauge stainless steel. Drawer slides are 11-gauge stainless steel with Delrin bearings. 19" drawers hold one full size 12" x 20" pan, 4"- 6" (10.1cm - 15.2cm) deep, each. 27" drawers hold two full size 12" x 20" (30.5cm x 50.8cm) pans, 4"- 6" (10.1cm - 15.2cm) deep. Pans are supplied by others.

Refrigeration System uses HFC-404A refrigerant. Cabinet has a blower coil assembly located behind door mullion. Base is equipped with independently controlled thermostat, solenoid valve and condensate evaporator. On/off switch for unit is located on panel above louver. Refrigeration system in the base will maintain 36°F (2°C) to 40°F (4°C).

Casters: Unit is mounted on 5" casters (6.12" ride height), diameter plate casters with front locking.

Electrical connections are 120/208 volt, 60 Hertz, three phase. Unit must be hard wired.

404A REFRIGERANT

ICES

980 S. Isabella Rd.
Mt. Pleasant, Michigan 48858

Phone: 800-733-8948 or 989-773-7981
Fax: 800-669-0619

www.delfield.com

Manitowoc

Delfield

Production Centers

Pasta Production Center

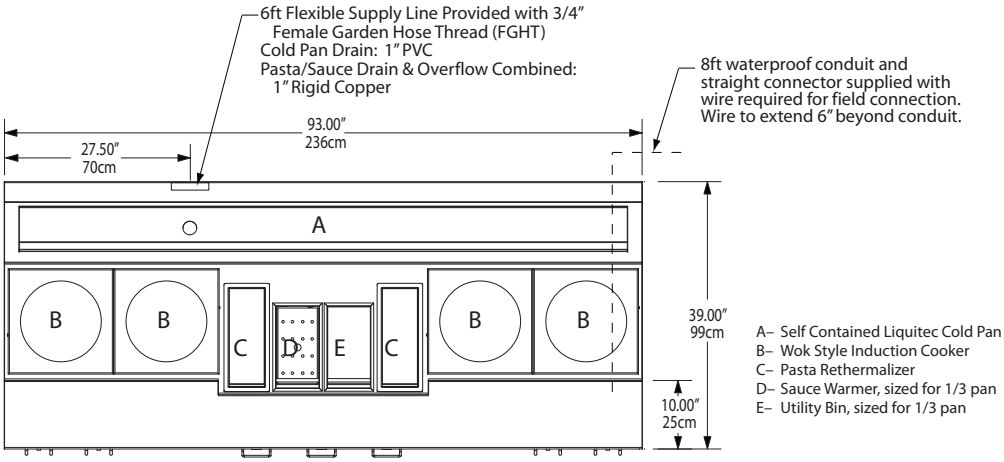

A– Self Contained Liquitec Cold Pan
B– Wok Style Induction Cooker
C– Pasta Rethermalizer
D– Sauce Warmer, sized for 1/3 pan
E– Utility Bin, sized for 1/3 pan

Plan View

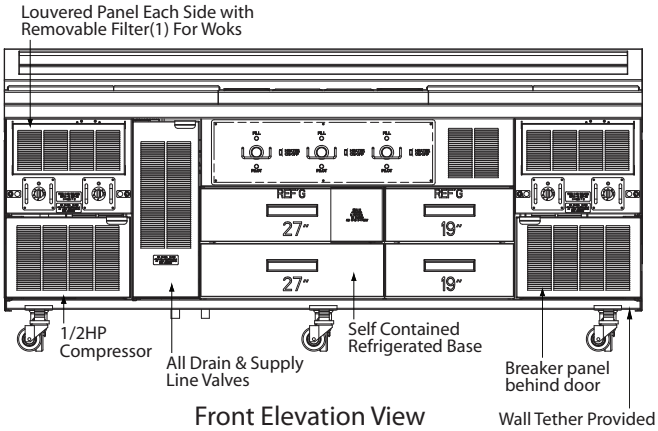

Front Elevation View

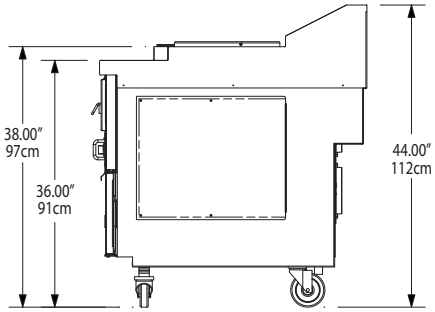

Side View

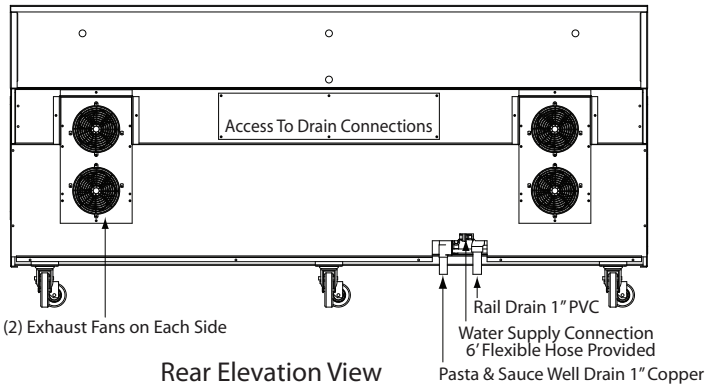

Rear Elevation View

Specifications

Model	1/6 Size Pan Cap. In Rail	Full Size Pan Cap. In Drawers*	# of Installed Induction Woks	H.P.	V-Hz-Ph	Amps	Ship Weight
F18RC93-BPL	14	6	4	1/2	120/208-60-3	84	1,255lbs/569kg

* Adapter bars for drawers provided

Delfield reserves the right to make changes to the design or specifications without prior notice.

980 S. Isabella Rd.
Mt. Pleasant, Michigan 48858

Phone: 800-733-8948 or 989-773-7981
Fax: 800-669-0619
www.delfield.com

Printed in the U.S.A.
DSPASTACENTER
03/12

Manitowoc