Delfield

Glass Door Merchandisers

Counter Top Glass Door Cooler

Project _____

Item _____

Quantity _____

CSI Section 11400

Approved _____

Date _____

Models

- DMER3-G - 3ft^3 capacity counter top glass door cooler

DMER3-G

Standard Features

- Built in door handle
- Blue top header sign standard
- Forced air evaporator for quick temperature pull down
- Heavy duty hinges with automatic return
- Attractive PVC frame
- Double paned Low-e glass door
- Two heavy duty shelves
- Robust body with thick walls, injected with CFC-free polyurethane
- Exterior cabinet made of galvanized, pre-painted steel, with baked polyester paint
- Listed to NSF-7 for the storage and/or display of packaged or bottled product
- Heavy duty condensing unit for R134a, located in front for easy-access maintenance
- Forced-air condenser made of copper and aluminum, resistant to rust and saline environments
- Reinforced 16-gauge steel base
- One year parts and labor warranty and an additional four year compressor warranty (U.S.A./Canada only)

Options & Accessories

- Wire shelf kit

Specifications

The exterior is constructed of galvanized, pre-painted steel, with a baked polyester paint. The base is reinforced 16-gauge steel.

The interior is an attractive, NSF approved, white interior cabinet. It's robust body is constructed of 1-1/4" thick walls. The entire cabinet structure is insulated with high-density foamed in place CFC-free polyurethane. Innovative LED interior lighting design is protected by safety shielding. Two adjustable heavy duty coated wire shelves are provided.

Refrigeration System: Forced air condenser is made of copper and aluminum, resistant to rust and saline solutions. The self-contained refrigeration system uses environmentally friendly (CFC-free) 134A refrigerant. It is located in the front of the unit for easy access. The refrigerant flow is controlled using a capillary tube. Forced air evaporator ensures quick temperature pull-down.

Door: Extruded frame door is constructed with Low-E, double pane thermal glass. They are the latest in energy efficient technology. Each door has heavy duty hinges with automatic return. Handle shall be built in.

980 S. Isabella Rd.
Mt. Pleasant, Michigan 48858

Phone: 800-733-8948 or 989-773-7981
Fax: 800-669-0619

www.delfield.com

Manitowoc

Delfield

Counter Top Glass Door Cooler

Glass Door Merchandisers

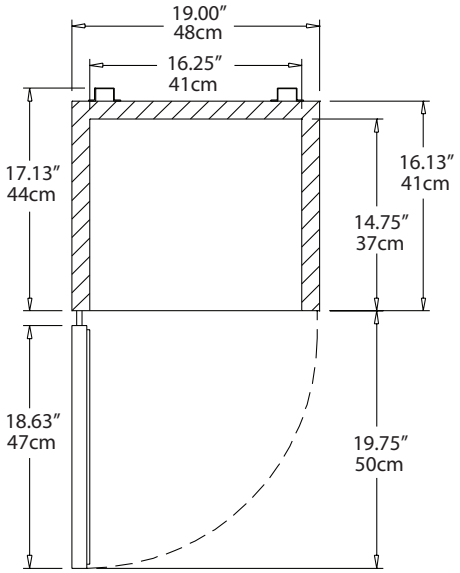

Top View

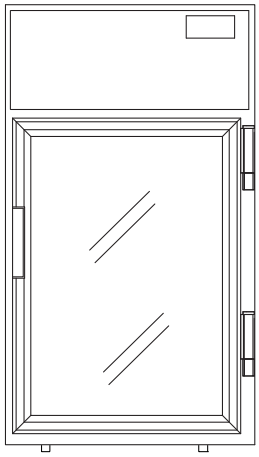

Elevation View

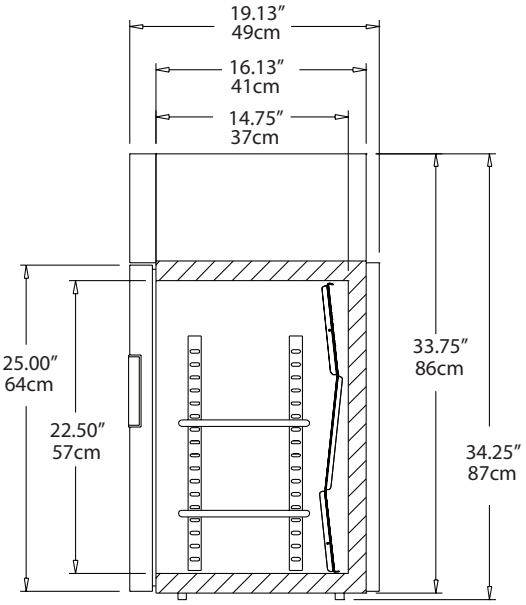

Side View

Specifications						
Model	Capacity	H.P.	Amps	Voltage	NEMA Plug	Shipping Weight
DMER3-G	3 ft^3	1/8	3.0	115V/60Hz/1Ph	5-15P	119lbs/54kg

Delfield reserves the right to make changes to the design or specifications without prior notice.

980 S. Isabella Rd.
Mt. Pleasant, Michigan 48858

Phone: 800-733-8948 or 989-773-7981
Fax: 800-669-0619
www.delfield.com

Printed in the U.S.A.
DSDMER3
01/13

Manitowoc