Delfield

# Specification Line®

## Self-Contained Solid Door Two-Section Dual Temp Refrigerator/Freezer Reach-Ins

Project _____

Item _____

Quantity _____

CSI Section 11400

Approved _____

Date _____

## Models

| Full door | Half door | |
|---|---|---|
| SSDRL2-S | SSDRL2-SH | Refrigerator left hand stainless exterior and interior |
| SSDFL2-S | SSDFL2-SH | Freezer left hand stainless exterior and interior |
| SADRL2-S | SADRL2-SH | Refrigerator left hand stainless exterior and aluminum interior |
| SADFL2-S | SADFL2-SH | Freezer left hand stainless exterior and aluminum interior |
| SMDRL2-S | SMDRL2-SH | Refrigerator left hand stainless front aluminum exterior and interior |
| SMDFL2-S | SMDFL2-SH | Freezer left hand stainless front aluminum exterior and interior |

SSDRL2-S

## Standard Features

- Stainless steel interior and exterior (SS)
- Stainless steel exterior, aluminum interior (SA)
- Aluminum interior and exterior, stainless front (SM)
- Built in door locks with heavy duty strikes
- Recessed metal door handle
- Pressure relief valve is standard to prevent door vapor lock
- Two exterior digital thermometers with high/low temperature alarm
- Easy to use electronic control
- Easy access "flip up" shroud
- Three wire shelves per section - SA/SS standard with chrome plated shelves and SM standard with epoxy coated shelves
- Tough ABS interior door liners
- 10' attached cord and plug
- 6" adjustable stainless steel legs
- Stainless steel breaker strips
- High density foamed in place environmentally friendly, Kyoto Protocol Compliant, Non ODP (Ozone Depletion Potential), Non GWP (Global Warming Potential) polyurethane keeps energy costs low
- Energy savings door heater switch
- Three year parts and labor warranty and an additional two year compressor parts warranty

## Options & Accessories

- Security (prison) package
- 6" polyurethane casters
- Door field rehingability
- Stainless steel interior door liner
- Additional shelves
- Three drawers in lieu of one bottom half height door
- Tray slides
- Stainless steel back
- Laminate on front, sides and back
- Bottom mount electrical
- Stainless steel banking strip
- Heat shield end
- Stainless steel kick plate
- Laminate kick plate
- 4" stainless steel utility base
- 230-50-1 electrical*
- 220-60-1 electrical*

** Inclusion of these options will alter the electrical specifications of unit*

## Specifications

**Exterior:** SS and SA models shall have corrosion resistant stainless steel exterior cabinet sides, front and shroud. SM models shall have corrosion resistant aluminum on exterior cabinet sides and will have stainless front and shroud. All units shall have the upper shroud hinged with a gas assist stay open feature to provide easy access to the refrigeration system.

**Interior:** Cabinet interior shall be corrosion resistant stainless steel (SS models) or heavy gauge aluminum (SA and SM models). Bottom and top surfaces shall be die stamped to provide radius corners and recessed floor. Three wire shelves are provided per section, SA/SS standard shelves are chrome plated, SM standard shelves are epoxy coated. Shelves rest on clips which are adjustable on 1" increments on stainless steel pilasters affixed to the cabinet interior. Pilasters are removable without tools for cleaning. Mounted to the interior ceiling of each compartment, the interior incandescent lights are controlled automatically through a switch mounted in the hinge assembly to protect against breakage. Door openings are protected with heavy gauge stainless steel breaker strips. An air duct shall be mounted to the ceiling assuring low velocity, even air movement throughout the cabinet interior.

**Doors:** Exterior shall be corrosion resistant stainless steel. Interior liner shall be resilient high impact ABS material formed to protrude beyond the door gasket to protect the gasket from tearing. Each door has two edge mount, self closing, cam lift style hinges. Doors can be removed from the cabinet without the use of tools. Metal door handle shall be recessed into the door for easy grip without impacting aisle space. Keyed door lock is mounted in the door next to the handle. Lock engages into a heavy duty strike mounted to the cabinet face. Door gaskets are magnetic and mount to the door snapping in place and are removable without tools.

**Refrigeration system:** Each compartment has its own separate refrigeration system. Condensing units are located on top of the cabinet, outside the food zone, behind the flip-up shroud. Each compartment's temperature is individually monitored and controlled using Delfield's ACT-Advanced Control Technology electronic temperature control, which provides improved pull down times, reduces compressor cycling and longer compressor life with lower energy consumption. Control system uses adaptive defrost to assure evaporator coil is free of ice and is operating at optimum efficiency. Evaporator condensate is eliminated using an energy efficient hot gas system. Two exterior digital thermometers display temperature. Refrigerator compartment maintains between 33°F and 40°F. Freezer compartment maintains temperature between -5°F and 0°F.

**Electrical:** Unit comes with one 10' cord and plug with single point connection to all cabinet and refrigeration system electronics. It is attached to a junction box mounted on the exterior top of the cabinet.

404A REFRIGERANT

Manitowoc enerlogic

980 S. Isabella Rd.
Mt. Pleasant, Michigan 48858

Phone: 800-733-8948 or 989-773-7981
Fax: 800-669-0619

www.delfield.com

Manitowoc

Delfield

Specification Line®

Self-Contained Solid Door Two-Section Dual Temp Refrigerator/Freezer Reach-Ins

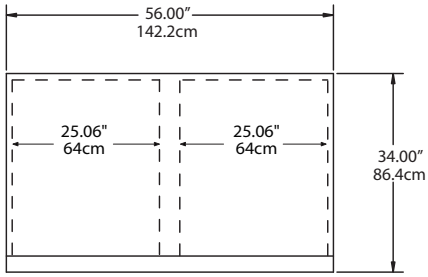


Plan View
All Models

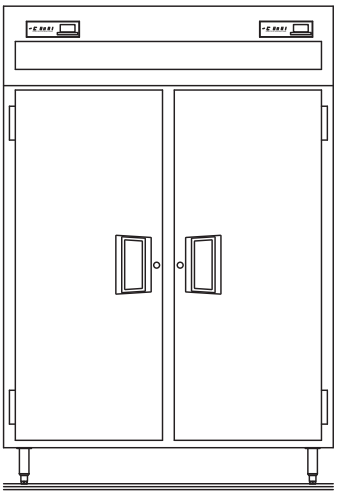

Elevation View
SSDRL2-S, SADRL2-S, SMDRL2-S
SSDFL2-S, SADFL2-S, SMDFL2-2

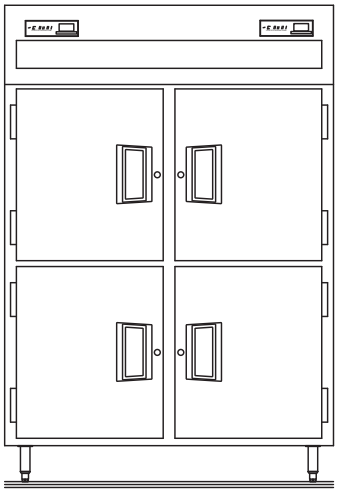

Elevation View
SSDRL2-SH, SADRL2-SH, SMDRL2-SH
SSDFL2-SH, SADFL2-SH, SMDFL2-SH

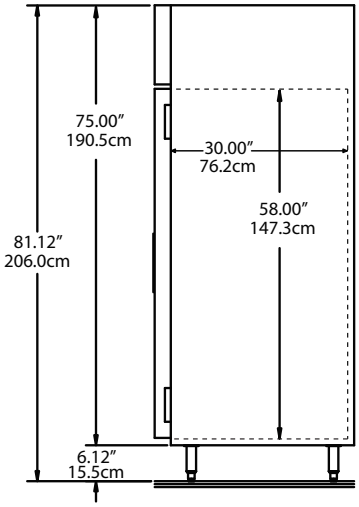


End View
All Models

Specifications

| Model | Description | V/Hz/Ph | Amps | Volume Cu.Ft. | Shelves Sq.Ft. | No. Of Shelves | H.P. | BTU/Hr System Cap | Ship Weight | Nema Plug | Energy KWH/Day |
|---|---|---|---|---|---|---|---|---|---|---|---|
| SSDRL2-S, SADRL2-S, SMDRL2-S, SSDRL2-SH, SADRL2-SH, SMDRL2-SH | Left Dr Ref<br>Right Dr Frz | 115/60/1 | 15.0 | 24.65<br>24.65 | 12.81<br>12.81 | 3<br>3 | 1/4<br>1/2 | 2092<br>1516 | 730lbs (331kg) | 5-20P | 15.93 |
| SSDFL2-S, SADFL2-S, SMDFL2-S, SSDFL2-SH, SADFL2-SH, SMDFL2-SH | Left Dr Frz<br>Right Dr Ref | 115/60/1 | 15.0 | 24.65<br>24.65 | 12.81<br>12.81 | 3<br>3 | 1/2<br>1/4 | 1516<br>2092 | 730lbs (331kg) | 5-20P | 15.93 |

Delfield reserves the right to make changes to the design or specifications without prior notice.


**980 S. Isabella Rd.**
**Mt. Pleasant, Michigan 48858**

**Phone: 800-733-8948 or 989-773-7981**
**Fax: 800-669-0619**
**www.delfield.com**



**Printed in the U.S.A.**
**DSSSD2**
**03/13**


Manitowoc