Production Centers

Pizza Production Center

Project _____

Item _____

Quantity _____

CSI Section 11400

Approved _____

Date _____

Production Centers: Pizza Production Center

Custom Models

- F18RC119-ES1L 119" pizza production center, product workflow to the left
- F18RC119-ES1R 119" pizza production center, product workflow to the right

F18RC119-ES1R

Standard Features

- Top is constructed of 16-gauge stainless steel
- High density environmentally friendly, Kyoto Protocol Compliant, Non ODP (Ozone Depletion Potential), Non GWP (Global Warming Potential) polyurethane foam throughout unit
- Snap-in dart style vinyl magnetic gaskets
- Recessed black plastic handle held in with a positive lock system
- 14 gauge leg rails that run the entire length of the unit
- Built-in Lincoln CTI oven
- Overstructure with ambient pan rack
- Ambient panslides accommodate 18"x26" sheets pans in base
- 6.12" casters
- 8' long electrical cord
- 36" standard work height
- Environmentally friendly HFC-404A refrigerant

Oven Standard Features

- Hot air under pressure surrounds the food with small jets of hot air. This allows for rapid heating, cooking, baking and crisping of foods
- Uniform heating/cooking of food products offer a wide tolerance for rapid baking at a variety of temperatures

Warranty

- One year parts and labor standard warranty
- Five year compressor warranty

Options & Accessories

- Stainless steel back
- Tray racks
- Locks
- Additional shelf (specify door size)
- Pans and adapter bars

980 S. Isabella Rd.
Mt. Pleasant, Michigan 48858

Phone: 800-733-8948 or 989-773-7981
Fax: 800-669-0619

www.delfield.com

F18RC119-ES1R

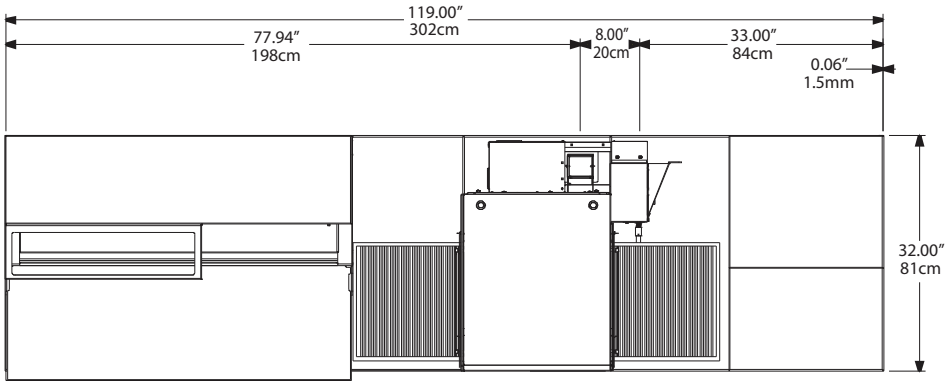

Plan View
F18RC119-ES1R

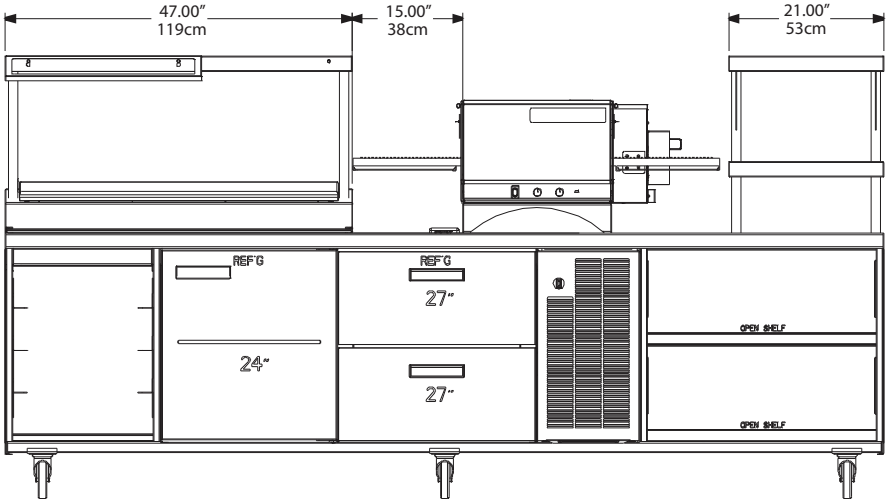

Elevation View
F18RC119-ES1R

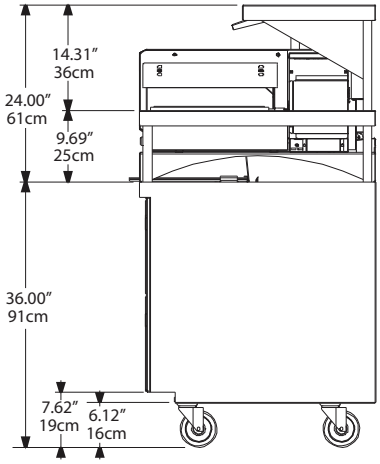

Right Side View
F18RC119-ES1R

F18RC119-ES1L

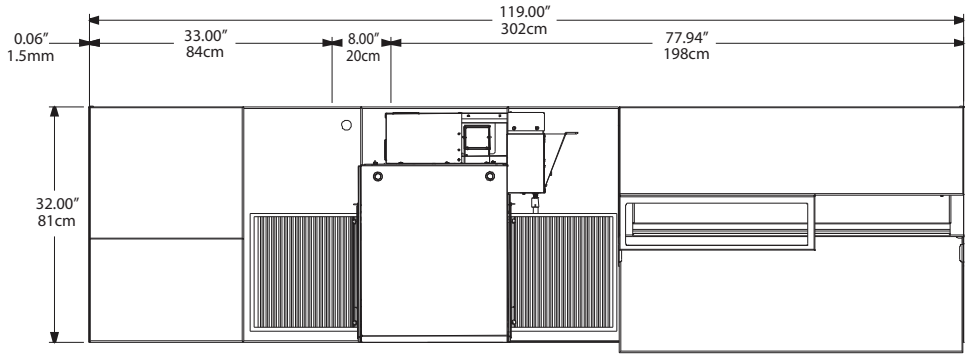

Plan View
F18RC119-ES1L

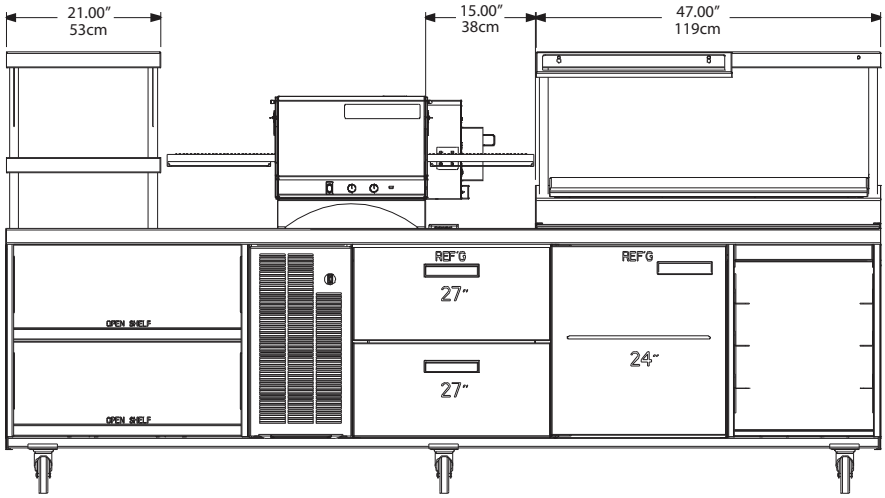

Elevation View
F18RC119-ES1L

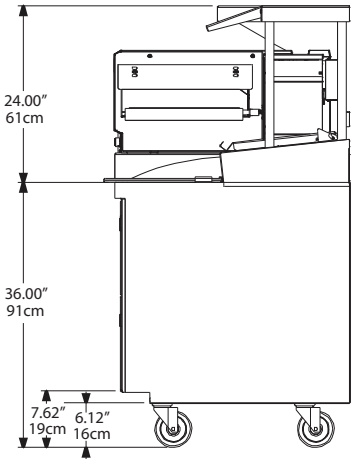

Right Side View
F18RC119-ES1L

F18RC119-ES1

Specifications							
Custom Model	L	W	H	H.P.	Amps	Nema Plug	Ship Weight
F18RC119-ES1L, F18RC119-ES1R	119" (302cm)	32" (81cm)	60" (152cm)	1/3	41.0	14-60	980lbs (445kg)

Delfield reserves the right to make changes to the design or specifications without prior notice.

Production Centers

Pizza Production Center

Specifications

Exterior top is one-piece, 16-gauge stainless steel, with integral 2.12" (5.4cm) high square nosing on front. Top has a mechanically cooled refrigerated raised rail at rear with openings to accommodate 1/6 size pans. Pans and adapter bars are provided by others. Pans are recessed 2" (5.1cm). Rail interior is 22-gauge stainless steel. Raised rail openings have 18-gauge stainless steel removable lids. Unit is equipped with separate expansion valve and on/off switch for refrigerated cold pan. Temperature in top opening to maintain 33°F (1°C) to 41°F (5°C) with pans recessed 2" (5.1cm) at 86° ambient room temperature, meeting NSF7 requirements.

Exterior Back and Bottom are 24-gauge galvanized steel. Exterior ends are finished with 22-gauge stainless steel.

Base Interior has 22-gauge stainless steel back and bottom. Refrigerated base interior ends and door frames are thermoformed ABS plastic. Base is insulated with 1.5" (3.8cm) high density foamed in place environmentally friendly, Kyoto Protocol Compliant, Non ODP (Ozone Depletion Potential), Non GWP (Global Warming Potential) polyurethane.

Door(s) have a 22-gauge stainless steel exterior front, with thermoformed ABS plastic interior liner, black recessed handle and snap in magnetic gasket which is easily replaceable. Each interior door section has (1) removable epoxy coated wire shelf.

Drawers have a 24-gauge stainless steel exterior with thermoformed ABS plastic interior liner. Drawer frames are 12-gauge stainless steel. Drawer slides are 11-gauge stainless steel with Delrin bearings. Each drawer holds two full size 12" x 20" (30.5cm x 50.8cm) pans, 4"- 6" (10.1cm - 15.2cm) deep. Pans are supplied by others.

Refrigeration System uses HFC-404A refrigerant. Cabinet has a blower coil assembly with expansion valve located behind door mullion. Base is equipped with independently controlled thermostat, solenoid valve and condensate evaporator. On/off switch for unit is located on panel above louver. Refrigeration system in the base will maintain 36°F (2°C) to 40°F (4°C).

Casters: Unit is mounted on 5" casters (6.12" ride height), diameter plate casters with front locking.

Electrical connections are 120/208 volt, 60 Hertz, single phase. Unit is wired with 8' (2.4m) cord and NEMA 14-60 plug.

Electric Baking/Finishing Oven is self-contained and conveyorized. Temperature is adjustable from 200°F (93°C) to 550°F (288°C). Conveyor speed is adjustable from 1 minute to 24 minutes cooking time. Conveyor and air distribution fingers are removable through the side-access panels for easy cleaning. Crumb pans are located below the conveyor belt outside the baking chamber.

A power on/off switch, temperature control and conveyor speed control are located on the front of the oven. A heating indicator light illuminates when heating.

Exterior is fabricated from No. 4 finish stainless steel. The air distribution system consists of an axial type fan powered by 1/10 hp AC motor. The headed air is forced through four (4) distribution fingers located in the baking chamber with two (2) above the conveyor belt and two (2) below. Each finger has required number of holes to create the air impingement effect on the food product passing through the baking chamber on the conveyor belt. The conveyor belt is a flexible stainless steel design with capacity for 16" (406mm) wide product and a travel distance of 50" (1269mm) on the extended conveyor, of which 20" (508mm) is in the baking chamber. The fuses for the controls and blower motor are located on the side of the control box.

Heat is supplied by one (1) element at 5600 watts. Each oven is rated at 6kW.

404A REFRIGERANT

980 S. Isabella Rd.
Mt. Pleasant, Michigan 48858

Phone: 800-733-8948 or 989-773-7981
Fax: 800-669-0619
www.delfield.com

Printed in the U.S.A.
DSPIZZACENTER
03/12