CONVOCHILL by Delfield®

T5 Blast Chiller/Shock Freezer

Project _____

Item _____

Quantity _____

CSI Section 11400

Approved _____

Date _____

T5: Blast Chiller/Shock Freezer

Models

- T5 Blast Chiller/Shock Freezer

Companion piece to the following products

- OES 6.10
- OEB 6.10
- OGS 6.10
- OGB 6.10

CONVOTHERM by Cleveland

T5

Standard Features

- Blast chill cycle: 44lb. chilling capacity - from 200˚F to 38˚ F in approximately 90 minutes
- Shock freeze cycle: 26lb. freezing capacity - from 200˚F to 0˚F in approximately 240 minutes
- On board, integral printer - date, temperatures and times during all chilling cycles printed out
- Automatic hot gas defrost
- Electronic control with 99 program capability and HACCP memory
- Time chill or temperature chill
- 1 core temperature probe
- Stainless steel interior and exterior
- Soft chill cycle for delicate foods
- Self-contained condensing unit
- Three year parts and labor warranty and an additional two year compressor parts warranty

Options & Accessories

- Combi Oven mounting plate to accommodate 6.10 oven on top
- Casters, 4.25" overall height, 2 fixed, 2 swivel

Specifications

Exterior: Cabinet exterior sides, front, door and grill are corrosion resistant stainless steel. The cabinet height is 37" with adjustable legs up to 40".

Interior: Cabinet interior is corrosion resistant stainless steel. Bottom and side corner surfaces are stamped to provide radius corners and recessed floors. Chrome plated pan racks accommodate up to five

12" x 20" x 2 1/2" deep, full size pans. Pan lip rests in pan slide assembly. Pan slide assembly is easily removable without the use of tools for cleaning. Stainless steel evaporator housing is mounted to the rear of the cabinet and removes for cleaning or evaporator access without the use of tools.

Doors: Stainless steel exterior and stainless steel interior door liner. Doors are field reversible with predrilled hinge mounting holes on both sides of the cabinet. Door seals tight to the cabinet with a magnetic door gasket. Gaskets snap into place and is easily removable without the use of tools. Door handle is continuous along the vertical dimension of the door.

Refrigeration system: Evaporator and condensing unit are self-contained and standard with the unit. Condensing unit is mounted at the bottom of the cabinet. The evaporator is mounted to the rear of the cabinet interior. Environmentally friendly R404A refrigerant is used. System has the capability of chilling up to 44lbs. of product from 200˚F to 38˚F in approximately 90 minutes or freezing up to 26lbs. of product from 200˚F to 0˚F in approximately 240 minutes. A single fan mounted to the front of the evaporator moves air at velocity sufficient to assure rapid, even cooling. System is controlled by an electronic microprocessor control designed for easy operation. Unit is designed to chill or freeze either for a designated time period, programed by the user or by temperature as monitored by a probe placed in the food product. One temperature probe is supplied. Operator has the choice of using a soft chill cycle for chilling delicate product or a hard chill cycle for denser, less delicate product. Evaporator defrost is automatic using a time/temperature terminated system. User also has the option of initiating a defrost cycle manually. Evaporator condensate is eliminated using an energy efficient hot gas system.

Electrical: Standard electrical connections are 220-230/60/1. A 4' cord and plug is provided and attached to a junction box at the rear of the cabinet.

CLASSIFIED UL EPH

c UL

980 S. Isabella Rd.
Mt. Pleasant, Michigan 48858

Phone: 800-733-8948 or 989-773-7981
Fax: 800-669-0619

www.delfield.com

Manitowoc

CONVOCHILL by Delfield®

T5: Blast Chiller/Shock Freezer

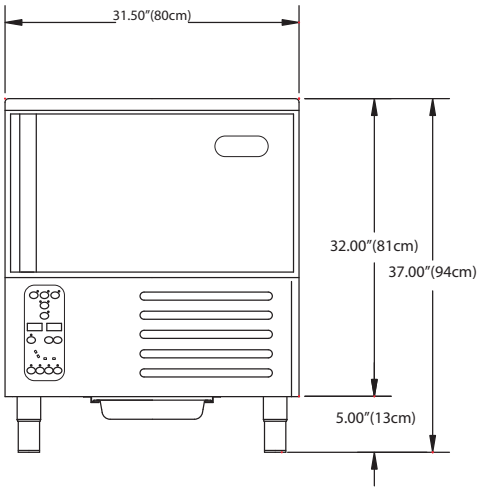

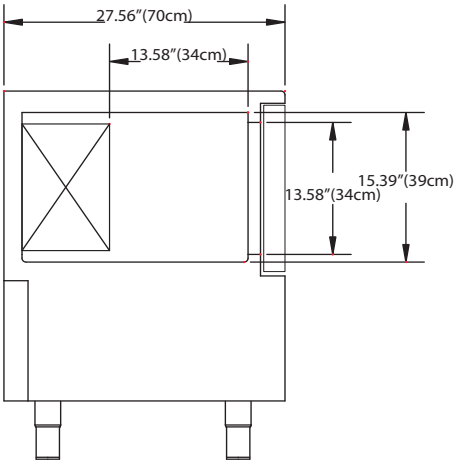

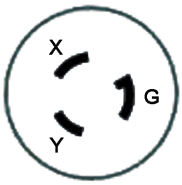

NEMA L6-20P
20Amps
250Volts

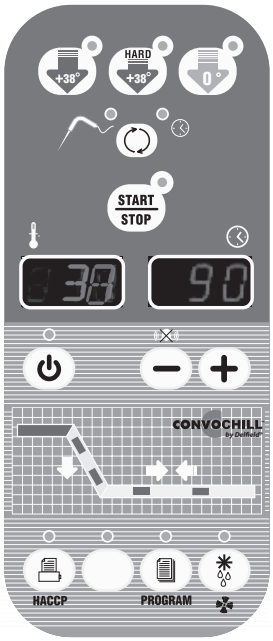


```
************************

************************

23:11    37°F  Stop
23:05    37°F  End Cycle
22:56    40°F
22:36    52°F
22:16    74°F
21:56   112°F
21:36   173°F  Start
    T Core / Cuore

 +3°C SOFT / TEMPERATURE

Program: Manual

Date: 18/08/2006

  BLAST CHILLER  T5
************************

************************
```

Sample Printout

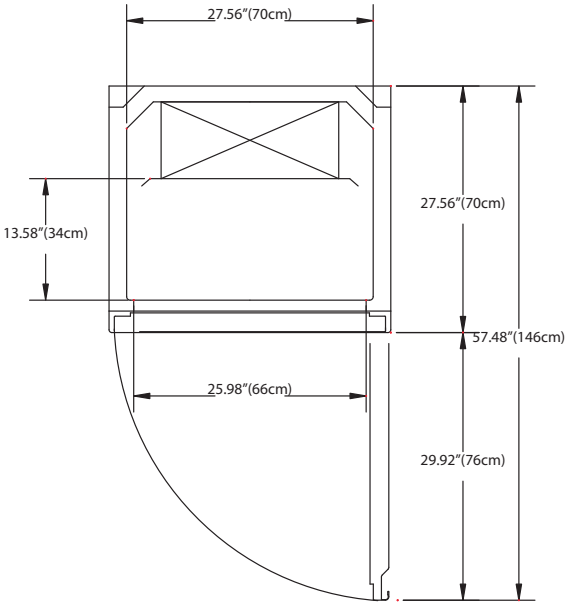

Model	V/Hz/Ph	Compressor H.P.	Total Max Amps	Max Fuse Size	Average Heat Rejected (W)	Ship Weight
T5	220-230/60/1	3/4	10.0	12.0	2,475	275lbs

Delfield reserves the right to make changes to the design or specifications without prior notice.

980 S. Isabella Rd.
Mt. Pleasant, Michigan 48858

Phone: 800-733-8948 or 989-773-7981
Fax: 800-669-0619
www.delfield.com

Printed in the U.S.A.
DST5
12/13

Manitowoc