Delfield

E-Chef™ Hot Food Table

Installation and Operation Manual

Please read this manual completely before attempting to install or operate this equipment! Notify carrier of damage! Inspect all components immediately.

Important Information
Read Before Use
Please Save These Instructions!

CAUTION

March 2013

Important Warning And Safety Information

WARNING Read This Manual Thoroughly Before Operating, Installing, Or Performing Maintenance On The Equipment.

WARNING Failure To Follow Instructions In This Manual Can Cause Property Damage, Injury Or Death.

WARNING Do Not Store Or Use Gasoline Or Other Flammable Vapors Or Liquids In The Vicinity Of This Or Any Other Appliance.

WARNING Unless All Cover And Access Panels Are In Place And Properly Secured, Do Not Operate This Equipment.

WARNING This Appliance Is Not Intended For Use By Persons Who Lack Experience Or Knowledge, Unless They Have Been Given Supervision Or Instruction Concerning Use Of The Appliance By A Person Responsible For Their Safety.

WARNING This Appliance Is Not To Be Played With.

WARNING Do Not Clean With Water Jet.

WARNING Do Not Use Electrical Appliances Inside The Food Storage Compartment Of This Appliance.

CAUTION Observe the following:

- Minimum clearances must be maintained from all walls and combustible materials.
- Keep the equipment area free and clear of combustible material.
- Allow adequate clearance for air openings.
- Operate equipment only on the type of electricity indicated on the specification plate.
- Unplug the unit before making any repairs.
- Retain this manual for future reference.

Contents

Receiving & Inspecting 3
Serial Number Location.....4
Warranty Information.....4
Regulatory Certifications.....4
Specifications.....5
Installation.....5
Operation.....6
Maintenance 7
Wiring Diagrams 8
Replacement Parts 9
Standard Labor Guidelines.....10
Notes 11

Receiving And Inspecting The Equipment

Even though most equipment is shipped crated, care should be taken during unloading so the equipment is not damaged while being moved into the building.

1. Visually inspect the exterior of the package and skid or container. Any damage should be noted and reported to the delivering carrier immediately.
2. If damaged, open and inspect the contents with the carrier.
3. In the event that the exterior is not damaged, yet upon opening, there is concealed damage to the equipment notify the carrier. Notification should be made verbally as well as in written form.
4. Request an inspection by the shipping company of the damaged equipment. This should be done within 10 days from receipt of the equipment.
5. Check the lower portion of the unit to be sure legs or casters are not bent.
6. Also open the compressor compartment housing and visually inspect the refrigeration package. Be sure lines are secure and base is still intact.
7. Freight carriers can supply the necessary damage forms upon request.
8. Retain all crating material until an inspection has been made or waived.

Uncrating the Equipment

First cut and remove the banding from around the crate. Remove the front of the crate material, use of some tools will be required. If the unit is on legs remove the top of the crate and lift the unit off the skid. If the unit is on casters it can be "rolled" off the skid.

Serial Number Location

The serial number on all E-Chef™ Series models is printed on the tag located on the interior side panel.

Always have the serial number of your unit available when calling for parts or service. A complete list of authorized Delfield parts depots is shown on the back cover of this manual.

©2013 The Delfield Company. All rights reserved. Reproduction without written permission is prohibited. "Delfield" is a registered trademark of The Delfield Company.

Warranty Information

Visit *http://www.delfield.com/minisite/service/warranty_info* to:

- Register your product for warranty.
- Verify warranty information.
- View and download a copy of your warranty.

Regulatory Certifications

All Models are certified by:

National Sanitation Foundation (NSF)

Underwriters Laboratories (UL)
Underwriters Laboratories of Canada (ULC)

Specifications

Model	Length	Overall Depth	Height	# Of Wells	Volts, Hertz, Phase	Amps	NEMA Plug
EHEI36L	36.00” (91cm)	31.50” (80cm)	36.00” (91cm)	2	120, 60, 1	20.0	N/A
EHEI36C	36.00” (91cm)	31.50” (80cm)	36.00” (91cm)	2	120, 60, 1	20.0	5-30P
EHEI48L	48.00” (122cm)	31.50” (80cm)	36.00” (91cm)	3	208/230, 60, 1	15.0/16.0	N/A
EHEI48C	48.00” (122cm)	31.50” (80cm)	36.00” (91cm)	3	208/230, 60, 1	15.0/16.0	6-20P
EHEI60L	60.00” (152cm)	31.50” (80cm)	36.00” (91cm)	4	208/230, 60, 1	20.0/22.0	N/A
EHEI60C	60.00” (152cm)	31.50” (80cm)	36.00” (91cm)	4	208/230, 60, 1	20.0/22.0	6-30P
EHEI74L	74.00” (188cm)	31.50” (80cm)	36.00” (91cm)	5	208/230, 60, 1	24.0/27.0	N/A
EHEI74C	74.00” (188cm)	31.50” (80cm)	36.00” (91cm)	5	208/230, 60, 1	24.0/27.0	6-50P

Installation

CAUTION

Installation should only be done by personnel certified and licensed to install and maintain electrical appliances.

Location

Intended for indoor use only. Do not install the hot food table near any combustible objects or surfaces affected by heat or moisture.

Leveling

This unit must be level, both front and back and left to right, in order to maintain an equal water depth throughout the wells.

Plumbing

A waste connection is provided 26.5” (67.3cm) above the floor, 5.25” (13.3cm) from the right end. You must supply the required 1/2” connection at gate valve.

Electrical connection

Refer to the specification pages amperage data, the serial tag, your local code or the National Electrical Code to be sure the unit is connected to the proper power source. A protected circuit of the correct voltage and amperage must be run for connection of the line cord, or permanent connection of the unit.

DANGER

The power switch must be turned to OFF and the unit disconnected from the power source whenever performing service or maintenance functions.

Operation

Before the unit is used the first time for serving, turn the temperature knob to HIGH and heat the well for 30 minutes. Any residue or dust that adhered to the heater element(s) will burn off during this initial preheat period.

When using thick sauces always operate the hot food well filled with water. This will provide a more uniform temperature for the sauce.

WEAR

Steam can cause serious burns. Always wear some type of protective covering on your hands and arms when removing lids or pans from the unit. Lift the lid or pan in a way that will direct escaping steam away from your face and body.

CAUTION

Never place food directly into the well. Always use pans.

Although these models may be operated either with or without water in the wells, wet operation is recommended.

Always place covers on pans when not serving to prevent food from drying out and to reduce your operating cost.

For most efficient operation when empty, keep covered insets in each well during preheating and when the well is not in use.

Do not put food down drain.

Wet operation

STEPS

1. Fill food well with two inches of water. For quicker pre-heating, use hot water to fill the well.
2. Turn the control to “HIGH” and pre-heat the warmer for 30 minutes. For fastest pre-heating place covers or empty pans in well.
3. After pre-heating, set the control to your desired serving temperature.

Only 4” (10cm) deep insets should be used with a wet food well.

Dry operation

STEPS

1. Pre-heat the well on “HIGH” for approximately 15 minutes. For fastest pre-heating place covers or empty pans in well.
2. After pre-heating, set the control to your desired serving temperature.

Only 6” (15cm) deep insets should be used with a dry food well. When operated dry, the bottom of the food well will discolor. A mild abrasive cleaner is recommended to clean this discoloration.

Temperature

Water in wells . . . . . 160°F to 180°F

Product in pans . . . . . 140°F to 160°F

Maintenance

Caster Maintenance
Wipe casters with a damp cloth monthly to prevent corrosion.

NOTE **The power switch must be turned to OFF and the unit disconnected from the power source whenever performing service, maintenance functions or cleaning the refrigerated area.**

Stainless Steel Care and Cleaning
To prevent discoloration or rust on stainless steel several important steps need to be taken. First, we need to understand the properties of stainless steel. Stainless steel contains 70- 80% iron, which will rust. It also contains 12-30% chromium, which forms an invisible passive film over the steel's surface, which acts as a shield against corrosion. As long as the protective layer is intact, the metal is still stainless. If the film is broken or contaminated, outside elements can begin to breakdown the steel and begin to form discoloration or rust. Proper cleaning of stainless steel requires soft cloths or plastic scouring pads.

NEVER USE STEEL PADS, WIRE BRUSHES OR SCRAPERS!

Cleaning solutions need to be alkaline based or non-chloride cleaners. Any cleaner containing chlorides will damage the protective film of the stainless steel. Chlorides are also commonly found in hard water, salts, and household and industrial cleaners. If cleaners containing chlorides are used be sure to rinse repeatedly and dry thoroughly. Routine cleaning of stainless steel can be done with soap and water. Extreme stains or grease should be cleaned with a non-abrasive cleaner and plastic scrub pad. Always rub with the grain of the steel. There are stainless steel cleaners available which can restore and preserve the finish of the steels protective layer. Early signs of stainless steel breakdown are small pits and cracks. If this has begun, clean thoroughly and start to apply stainless steel cleaners in attempt to restore the passivity of the steel.

CAUTION **Never use an acid based cleaning solution! Many food products have an acidic content, which can deteriorate the finish. Be sure to clean the stainless steel surfaces of ALL food products. Common items include, tomatoes, peppers and other vegetables.**

NOTE **Units with pans should be operated with pans in place. Operating the unit without all pans in place will lower efficiency and may damage the unit.**

Plexiglas Food Shield Cleaning
Wet a clean cloth with lukewarm water and dishwashing liquid. Apply only light pressure, rinse with clear and blot dry with a damp chamois. For excessively dirty surfaces, rinse surface dirt off before washing. Fine scratches will disappear when you polish by hand with a plastic cleaner polish.

NOTE **Never use window sprays, kitchen scouring compounds or solvents such as acetone, gasoline, benzene, alcohol, carbon tetrachloride or lacquer thinner to clean plexiglas.**

Wiring Diagrams

120 Or 208-230V Single Phase Models

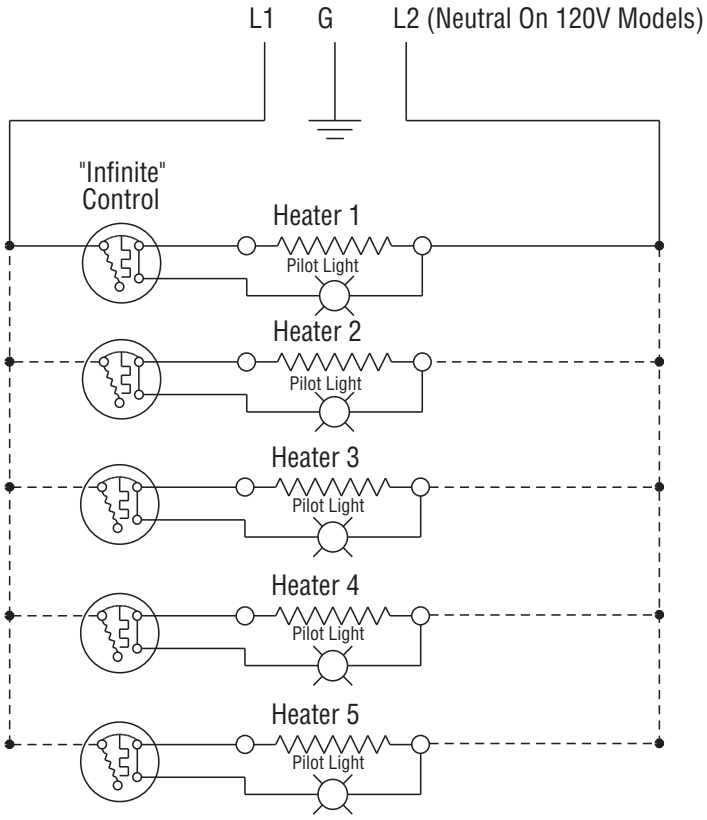

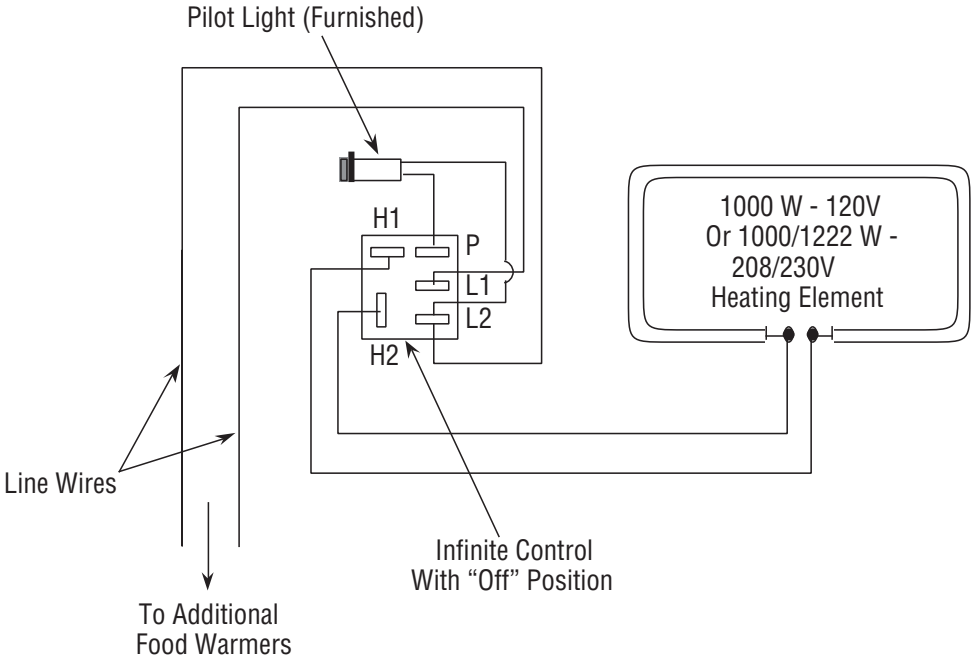

Replacement Parts

Part Name	*Delfield Part #*
Cutting board pin cap	1701000
Cutting board pin screw	9321076
Brass cutting board hinge pin	3234360
Polyethlene board, model EHEI36	096-004-0031
Polyethlene board, model EHEI48	096-004-0032
Polyethlene board, model EHEI60	096-004-0033
Polyethlene board, model EHEI74	096-004-0034

Delfield Food Well (DFW) Assembly With Infinite Control		
Key	*Part Name*	*Delfield Part #*
-	**Complete assembly, 120V, infinite w/drain**	000-516-0000
-	**Complete assembly, 208-230V, infinite w/drain**	000-518-0000
1	Deflector plate	026-061-0001
2	Bottom cover	026-103-0001
3	Food well, with drain	323-4361
4	Screw	932-1353
5	Element, 120V	219-4006
	Element, 208-230V	219-4007
6	Screws (2)	932-1379
7	Insulation	3434663
8	Thermostat non-adjustable	219-4335
9	Screw	932-1007
10	Drain cover	027-210-0001
11	Screws (2)	932-1007
12	Infinite control, 120V	219-4107
	Infinite control, 208-230V	219-4110
13	Infinite control knob	323-4557
14	Pilot light, red, 120V	219-4190
	Pilot light, amber, 208-230V	219-4095

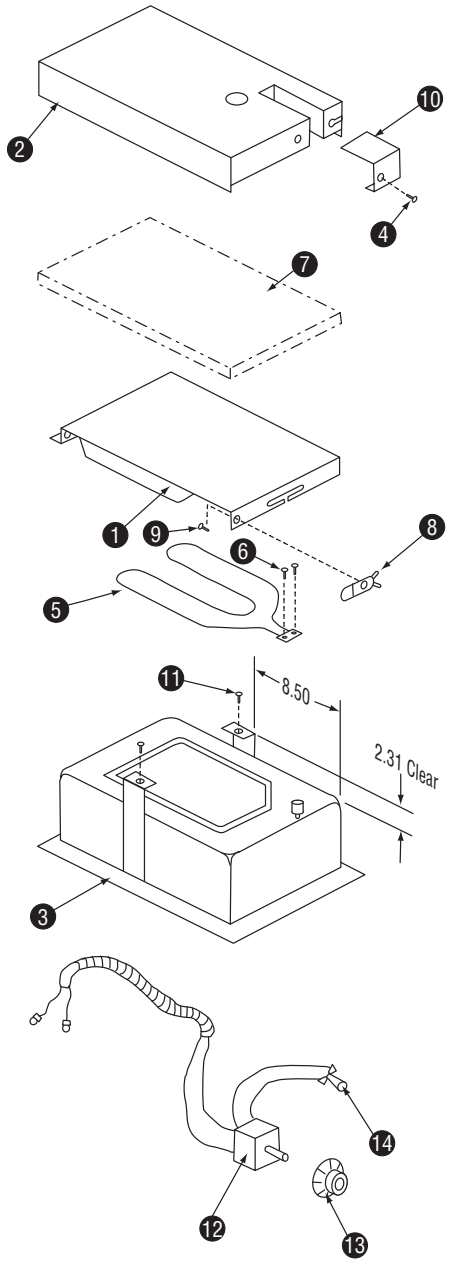

Infinite Control

Standard Labor Guidelines To Repair Or Replace Parts On Delfield Equipment

Advice and recommendations given by Delfield Service Technicians do not constitute or guarantee any special coverage.

- A maximum of 1-hour is allowed to **diagnose a defective component**.
- A maximum of 1-hour is allowed for **retrieval of parts** not in stock.
- A maximum **travel distance** of 100 miles round trip and 2-hours will be reimbursed.
- Overtime, installation/start-up, normal control adjustments, general maintenance, glass breakage, freight damage, and/or correcting and end-user installation error will not be reimbursed under warranty unless pre-approved with a **Service Work Authorization** from Delfield. You must submit the number with the service claim.

LABOR OF 1-HOUR IS ALLOWED TO REPLACE:

- Infinite Switch
- Hi-limit/Thermal Protector Switch

LABOR OF 2 HOURS TO REPLACE:

- Heating Element

Notes

Mt. Pleasant, MI

Covington, TN

Thank you for choosing Delfield!

Help is a phone call away. Help our team of professional, courteous customer service reps by having your model number and serial number available at the time of your call (800) 733-8829.

Model: _____ S/N: _____

Installation Date: _____

For a list of Delfield's authorized parts depots, visit our website at www.delfield.com

Manitowoc STAR CERTIFIED SERVICE AND PARTS

Register your Delfield warranty online. Go to www.delfield.com under the service tab to complete.

980 S. Isabella Rd., Mt. Pleasant, MI 48858, U.S.A. • (989) 773-7981 or (800) 733-8829 • Fax (989) 773-3210 • www.delfield.com
Delfield reserves the right to make changes in design or specifications without prior notice. ©2013 The Delfield Company. All rights reserved. Printed in the U.S.A.
DMECHEF 03/13
9291472