Versa Drawer Refrigeration Units

Parts List

Versa Drawer Assemblies 2
4-Drawer Machine Compartment Assembly 3
2-Drawer Machine Compartment Assembly 4
Lo-Profile Machine Compartment Assembly 5
Evaporator Assembly 6
Drawer Assembly 7
Control Parts 7

Document Number: 9291506 Updated: 11/15

Versa Drawer Assemblies

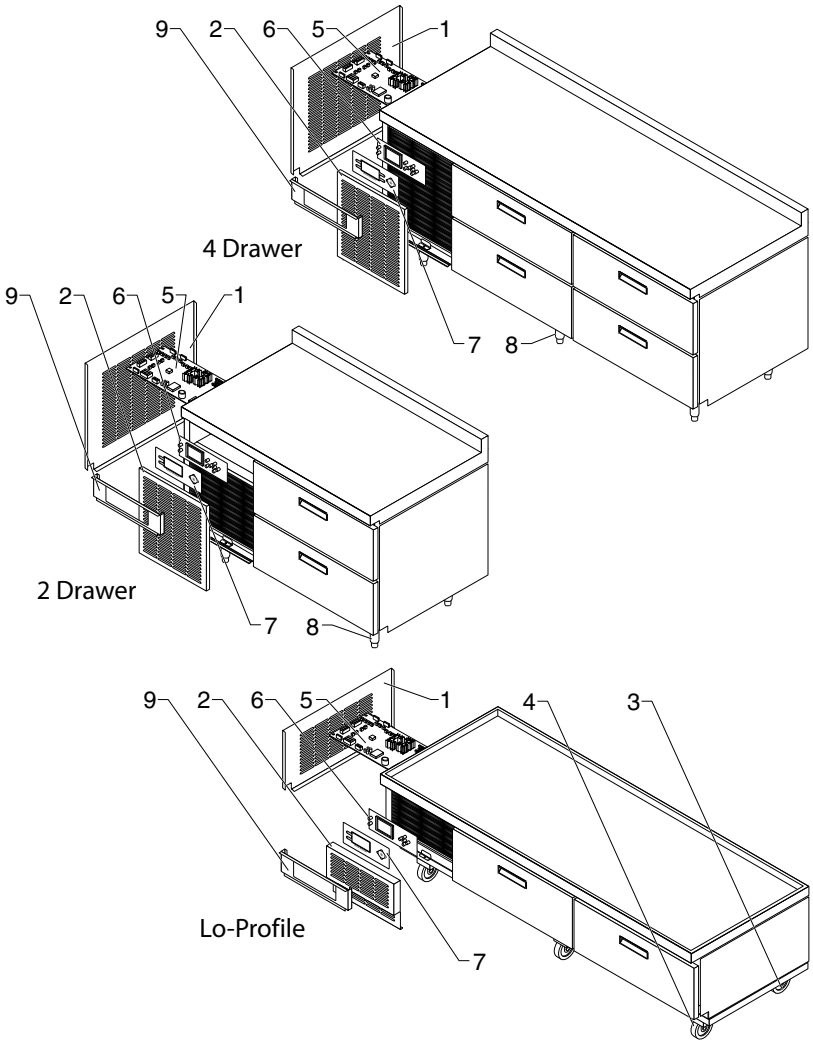

Key	Description	Part Number	Qty					
			Lo-Profile		2 Drawer		4 Drawer	
			Free Standing	MK7	Free Standing	MK7	Free Standing	MK7
1	Louvered Access Panel (F18VD50 & F18VD82)	223-BET-0034				1		1
	Louvered Access Panel (F17VD84)	223-BET-0040		1				
	Louvered Access Panel (18650VDLI & 18682VDL)	272-AW8-0031			1		1	
	Louvered Access Panel (18650VDR & 18682VDR)	272-AW7-0032			1		1	
	Louvered Access Panel (F2982VDL)	221-AM9-0030	1					
	Louvered Access Panel (F2982VDR)	221-AMA-0031	1					
2	Front Louvered Panel	356-478-003H	1	1				
	Front Louvered Panel	356-478-003F			1	1		
	Front Louvered Panel	272-478-003G					1	1
3	Caster 5"	3234198	3		2 [A]		3 [A]	
4	Caster 5" W/Brake	3234199	3		2 [A]		3 [A]	
5	Control Board, Electric I/O (units built after 1-23-14)	000-CZ0-003K	1	1	1	1	1	1
	Kit, Control & I/O Board (units built before 1-23-14)	000-CQM-0004						
6	Control Board, Display (units built after 1-23-14)	000-CZ0-003P	1	1	1	1	1	1
	Kit, Control & I/O Board (units built before 1-23-14)	000-CQM-0004						
7	Control Overlay	9292172	1	1	1	1		
	Control Overly	9292173					1	1
8	6" Legs	3234645		6 [A]		4 [B]		6 [A]
9	Display Board S/S Cover	221-BET-0035	1	1	1	1	1	1

NOTE: [A] Optional On F18VD Series.
NOTE: [B] Optional On 18600VD Series.

4-Drawer Machine Compartment Assembly

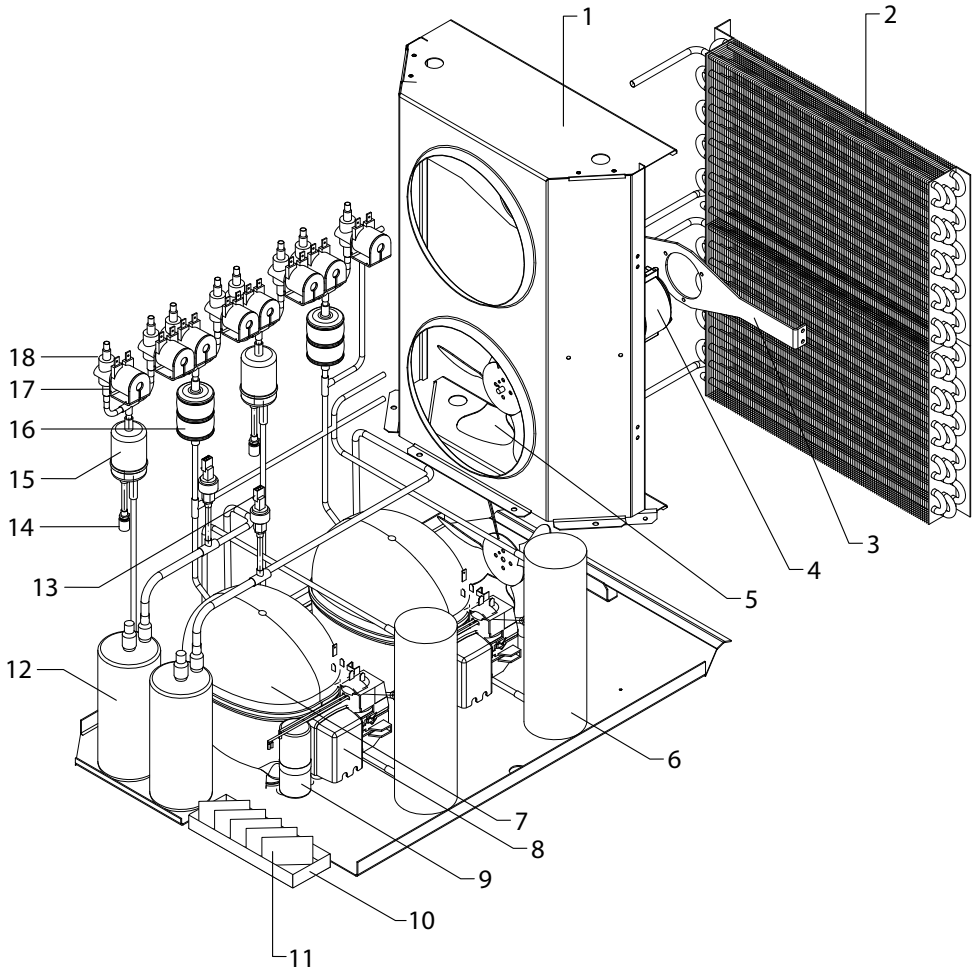

Key	Description	Part Number	Note
1	Condenser Cover	026-C20-0031	
2	Condenser Coil	3516401	
3	Condenser Fan Bracket	022-A9Y-0030	
4	Condenser Fan Motor	2162717	
	Condenser Fan Motor, 230-240V	2162720	
5	Condenser Fan Blade	3516405	
6	Receiver Tank	3516657	[C]
7	Compressor, 115V/60Hz	3527000	
	Compressor, 230-240V	3527009	
8	Relay, 115V/60Hz	3516438	
9	Start Capacitor, 115V/60Hz	2194788	
10	Condensate Evaporator Wick Holder	019-261-0031	
11	Condensate Wick	3516138	
12	Accumulator	3516397	
13	Pressure Transducer	3516404	
14	Access Valve	3547639	
15	Filter Dryer	3516322	
16	Filter Dryer	3516101	
17	Solenoid Coil	3516472	
	Solenoid Coil, 230-240V	3516473	
18	Solenoid Valve	3516474	
-	Temperature Sensor	3516403	
-	EMI Filter, 230-240V	2194963	

NOTE: [C] Re-piping may be required for installation.

2-Drawer Machine Compartment Assembly

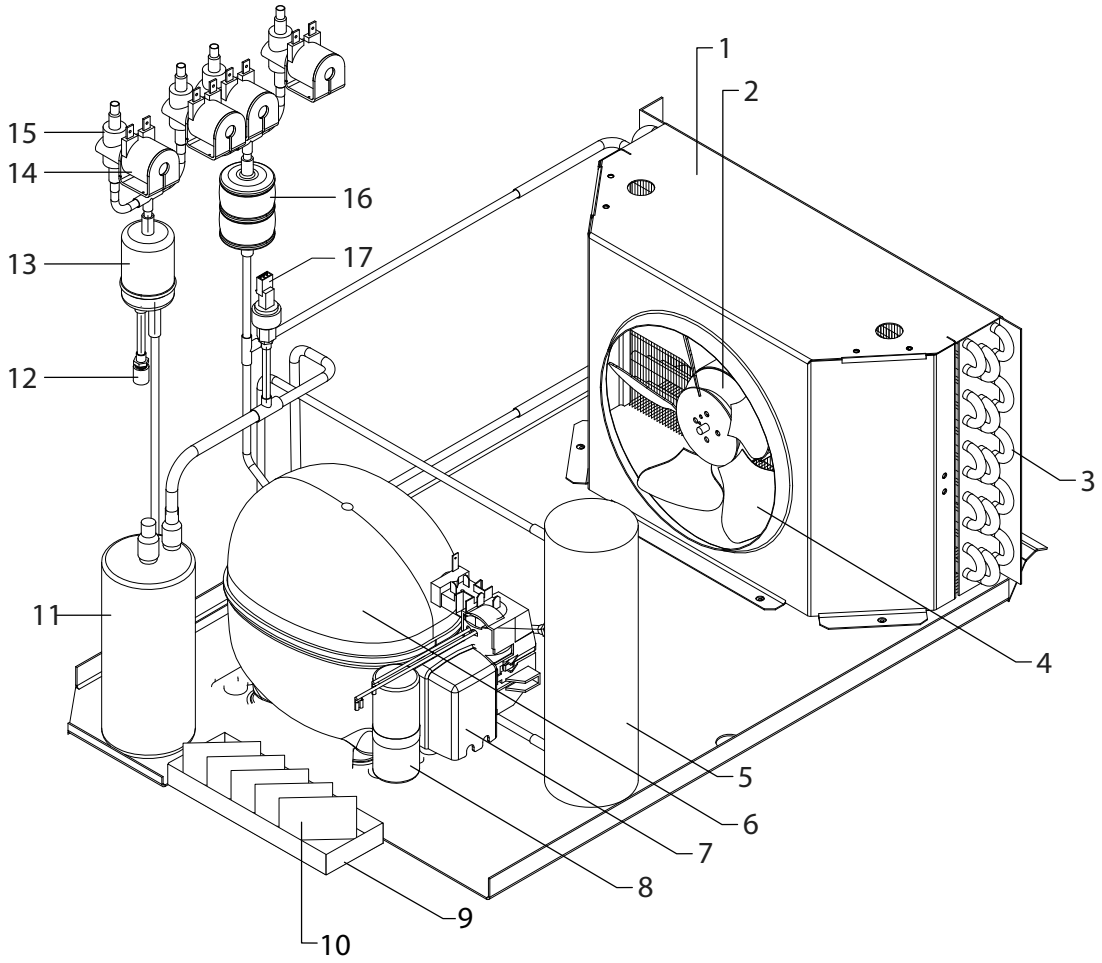

Key	Description	Part Number	Note
1	Condenser Cover	026-C20-0030	
2	Condenser Fan Motor	2162717	
	Condenser Fan Motor, 230-240V	2162720	
3	Condenser Coil	3516401	
4	Condenser Fan Blade	3516405	
5	Receiver Tank	3516657	[C]
6	Compressor, 115V/60Hz	3527000	
	Compressor, 230-240V	3527009	
7	Relay, 115V/60Hz	3516438	
8	Start Capacitor, 115V/60Hz	2194788	
9	Condensate Evap Wick Holder	019-261-0030	
10	Condensate Wick	3516138	
11	Accumulator	3516397	
12	Access Valve	3547639	
13	Filter Dryer	3516322	
14	Solenoid Coil	3516472	
	Solenoid Coil, 230-240V	3516473	
15	Solenoid Valve	3516474	
16	Filter Dryer	3516101	
17	Pressure Transducer	3516404	
-	Condenser Fan Bracket	022-A9Y-0030	
-	Temperature Sensor	3516403	

NOTE: [C] Re-piping may be required for installation.

Lo-Profile Machine Compartment Assembly

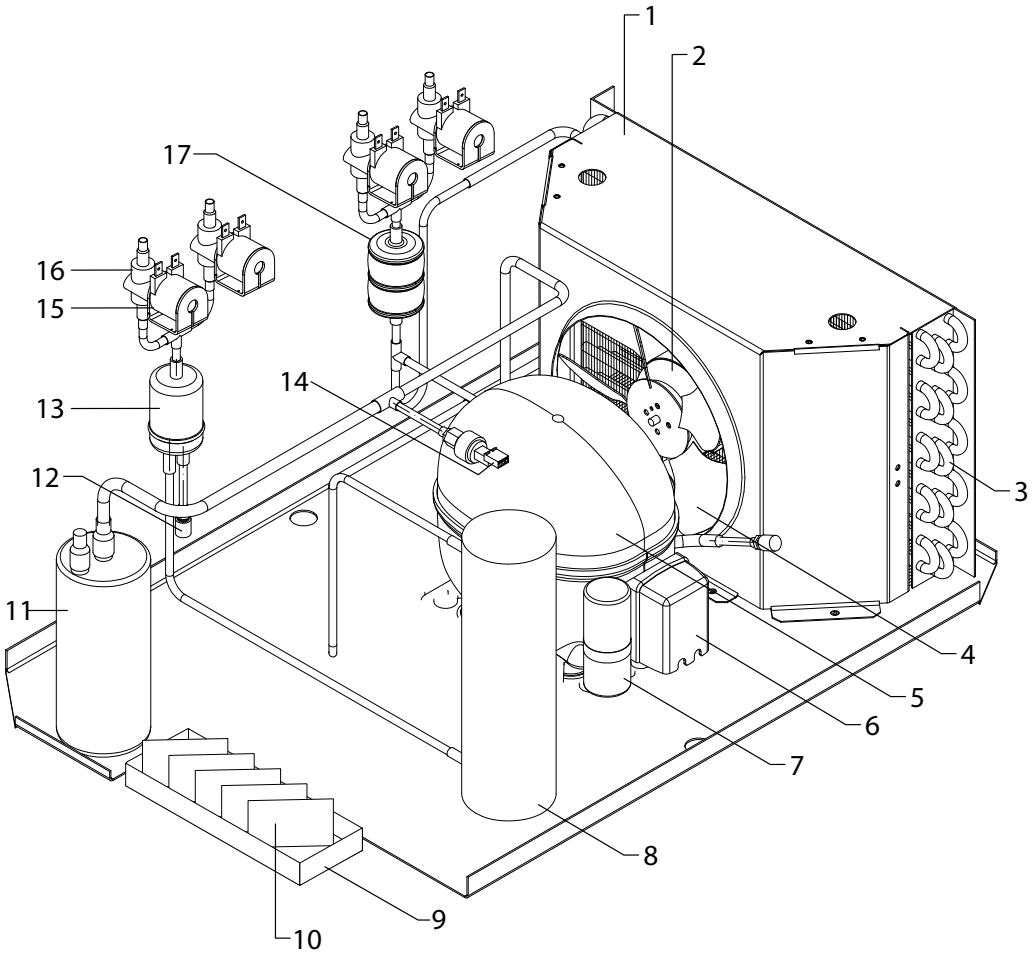

Key	Description	Part Number	Note
1	Condenser Cover	026-C20-0030	
2	Condenser Fan Motor	2162717	
	Condenser Fan Motor, 230-240V	2162720	
3	Condenser Coil	3516401	
4	Condenser Fan Blade	3516405	
5	Compressor, 115V/60Hz	3527000	
	Compressor, 230-240V	3527009	
6	Relay, 115V/60Hz	3516438	
7	Start Capacitor, 115V/60Hz	2194788	
8	Receiver Tank	3516657	[C]
9	Condensate Evap Wick Holder	019-261-0030	
10	Condensate Wick	3516138	
11	Accumulator	3516397	
12	Access Valve	3547639	
13	Filter Dryer	3516322	
14	Pressure Transducer	3516404	
15	Solenoid Coil	3516472	
	Solenoid Coil, 230-240V	3516473	
16	Solenoid Valve	3516474	
17	Filter Dryer	3516101	
-	Condenser Fan Bracket	022-A9Y-0030	
-	Temperature Sensor	3516403	

NOTE: [C] Re-piping may be required for installation.

Evaporator Assembly

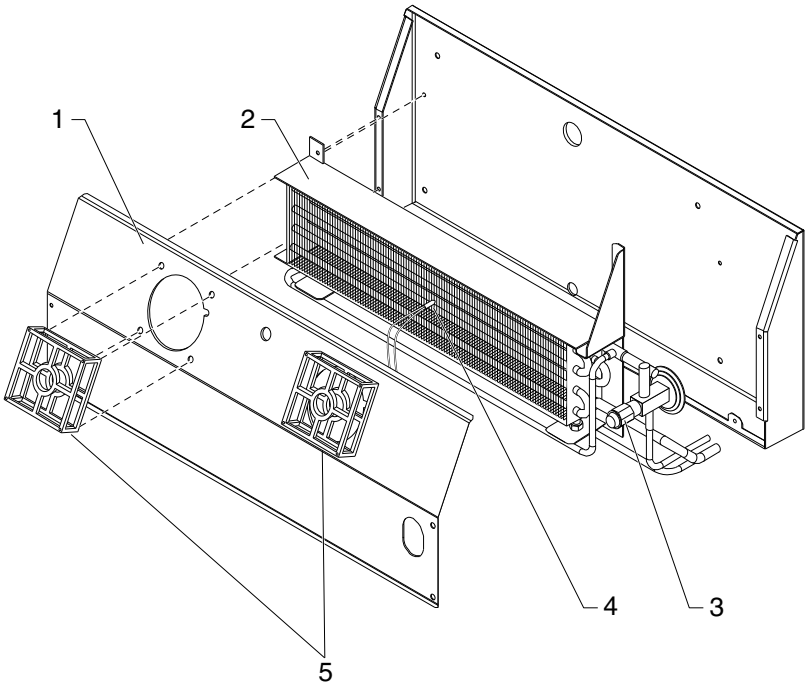

Use With Models Serial Number 1407150002672 & Later

Key	Description	Part Number
-	Complete Evaporator Assembly	000-C1X-0030
1	Coil Assembly Cover	226-C1Y-0030
2	Evaporator Coil	3516400
3	Expansion Valve	3516396
4	Temperature Sensor	3516403
5	Evaporator Fan Motor/Blade Assembly	2194367

Use With Models Before Serial Number 1407150002672

Key	Description	Part Number
-	Complete Evaporator Assembly	000-C1X-0001
1	Coil Assembly Cover	226-C1Y-0006
2	Evaporator Coil	3516400
3	Expansion Valve	3516396
4	Temperature Sensor	3516403
5	Evaporator Fan Motor/Blade Assembly	2193993

Drawer Assembly

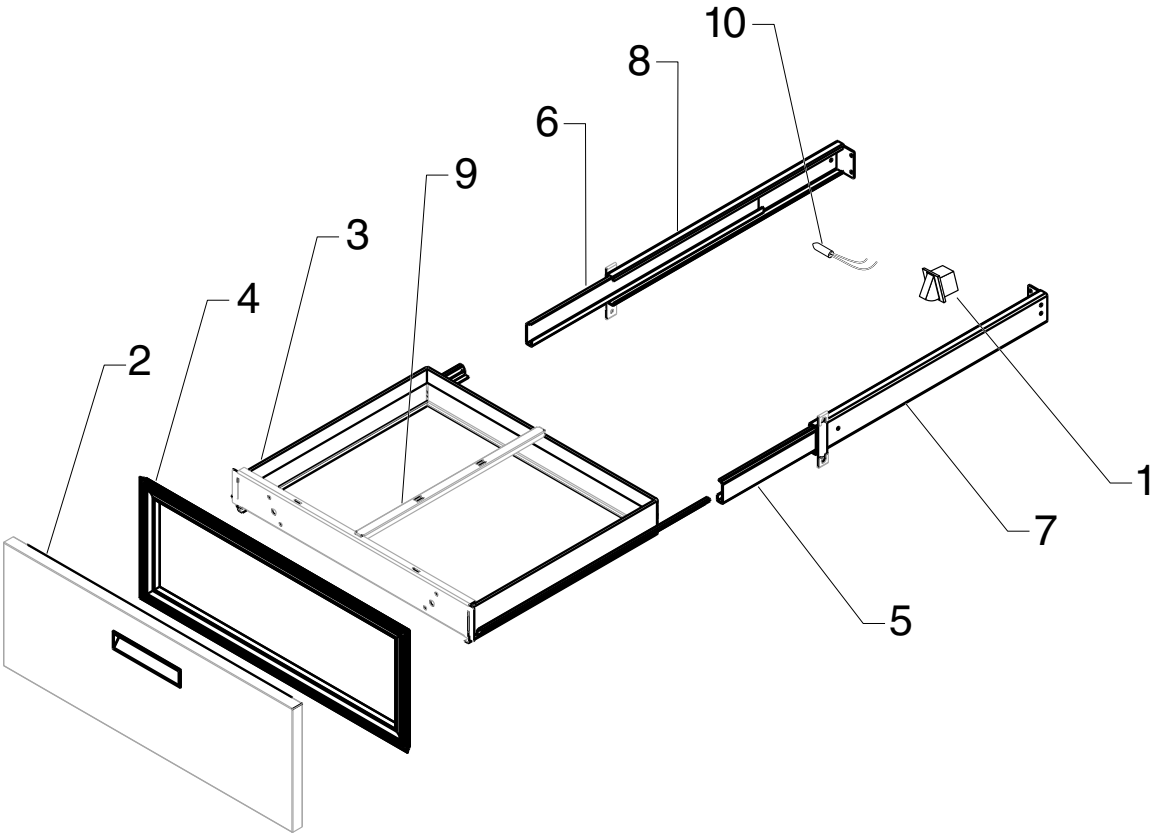

Key	Description	Part Number
1	Drawer Switch For Fan	2194550
2	Drawer Front Assembly	000-328-003U
3	Drawer Box Assembly	000-333-004F
4	Drawer Gasket	1702812
5	Intermediate Profile - Reg Extension - Rh	3234949
6	Intermediate Profile - Reg Extension - Lh	3234948
7	Outer Profile - Rh	3234930
8	Outer Profile - Lh	3234929
9	Divider Bar	372-018-003J
10	Temperature Sensor	3516403

Control Parts

Description	Part Number	Quantity		
		Lo-Profile	2 Drawer	4 Drawer
Harness, Brd-Ctr, Vs	2183842	1	1	1
Harness, Low Voltage	2183838		1	
Harness, Low Voltage	2183839	1		1
Harness, Machine Compartment	2183840		1	
Harness, Machine Compartment	2183841	1		1

Manitowoc
KitchenCare™

1-844-724-CARE • www.mtwkitchencare.com