Delfield

4448N Mega Top

Front-Breathing Self-Contained Mega Top Refrigerated Bases

Project _____

Item _____

Quantity _____

CSI Section 11400

Approved _____

Date _____

Models

- 4448N-18M — Two section with doors, eighteen pan capacity
- D4448N-18M — Two section with drawers, eighteen pan capacity

4448N-18M

Standard Features

- Patented air screen ensures product stays cold without drying it out
- All 4400 Series units are 100% front breathing, which allows the unit to be pushed against a wall or built into a cabinet or an existing line up
- Durable, rugged stainless steel sides, top and front
- Features Delfield's exclusive ABS interior (on sides). ABS is extremely durable - it won't dent, chip or corrode and is backed by a limited lifetime warranty
- Delfield supplies 1/6 size pans and positive placement adapter bars for top opening
- Dual level pan brackets allow the pans to be lowered an additional inch in the unit without tools to provide additional pan temperature holding performance
- Mega top refrigerators are standard with 8" wide, dishwasher safe polyethylene cutting board treated with antimicrobial agent
- "D" prefix models feature Delfield's new drawer system. Drawers are backed by a 10-year warranty on the track assembly
- Environmentally friendly R404A refrigerant
- High density foamed in place environmentally friendly, Kyoto Protocol Compliant, Non ODP (Ozone Depletion Potential), Non GWP (Global Warming Potential) polyurethane keeps energy costs low
- Black recessed quick grip handle
- Standard on 5" casters for easy cleaning and installation
- 6' cord and plug supplied
- One epoxy coated wire shelf standard, installed per door section
- ACT solid state electronic control
- Three year parts and labor warranty and an additional two year compressor parts warranty

Options & Accessories

- Flat lift off cover
- 18" wide single tier overshelf
- Stainless steel finish on back
- Plastic laminate on front
- Additional wire shelves
- 3" casters, 3.75" ride height
- Door lock
- Exterior thermometer
- 220V/50 Hertz electrical system*

* *Inclusion of this option will alter electrical specifications of the unit*

Specifications

Exterior top is one-piece 22-gauge stainless steel with integral 2.12" (5.4cm) square nosing on the front. Top of drawer unit has openings to accept eighteen 1/6 size plastic pans 4" (10cm) deep. Top of door unit has openings to accept eighteen 1/6 size plastic pans 4" or 6" (10cm or 15cm) deep. Adapter bars and 1/6 size pans are supplied by Delfield. Top has one telescoping lid is constructed of 20-gauge stainless steel. Temperature in top openings maintains 33°F (1°C) to 41°F (5°C), with pans recessed 2.5" (6.4cm) at 86°F ambient room temperature, meeting NSF 7 requirements. One 48" x 8" x .5" (121.9cm x 20.3cm x 1.3cm) polyethylene cutting board treated with antimicrobial agent is mounted on the top at the front edge.

Dual level pan brackets allow the pans to be lowered an additional inch in the unit without tools to provide additional pan temperature holding performance.

Exterior back and bottom are two-piece 24-gauge galvanized steel. Exterior ends are stainless steel.

Interior sides are thermoformed ABS plastic with integral shelf supports. Base is fully insulated with high-density foamed in place environmentally friendly, Kyoto Protocol Compliant, Non ODP (Ozone Depletion Potential), Non GWP (Global Warming Potential) polyurethane.

Refrigeration system uses HFC-404A refrigerant. Compressor is 1/5 H.P., with condenser coil and hot gas condensate evaporator mounted on rear of the cabinet. Evaporator coil is located on the interior rear wall of the cabinet. Refrigerant flow is controlled by a capillary tube. Cabinet maintains an interior cabinet temperature of 36°F to 40°F (2°C to 4°C).

ACT control: ACT electronic, solid state control, mounted on the exterior rear of the cabinet, allows unit to maintain precise temperatures in heavy duty conditions.

Electrical connections are 115 volt, 60 Hertz, single phase. Unit has a 6' (1.8m) long electrical cord and NEMA 5-15P plug.

Casters: Equipment is mounted on 5" (13cm) diameter plate casters with front two locking. Equipment clearance above the floor is 2.5" (6cm).

Doors have a 24-gauge stainless steel exterior, with thermoformed ABS plastic interior liner. Cabinet has one adjustable epoxy-coated wire shelf per door opening.

Drawers have 24-gauge stainless steel exterior with thermoformed ABS plastic interior liner. Drawer frames are 12-gauge stainless steel. Drawer slides are 11-gauge stainless steel with Delrin bearings. Each top drawer will hold one 12" x 20" (30.5cm x 50.8cm) pan and three 1/9 size 4"-6" (10.1cm-15.2cm) deep pans. Each bottom drawer holds one 12" x 20" (30.5cm x 50.8cm) pan and three 1/9 size 4" (10.1cm) deep pans. Pans are supplied by others.

404A REFRIGERANT

980 S. Isabella Rd.
Mt. Pleasant, Michigan 48858

Phone: 800-733-8948 or 989-773-7981
Fax: 800-669-0619

www.delfield.com

Manitowoc

Delfield

4448N Mega Top

Front-Breathing Self-Contained Mega Top Refrigerated Bases

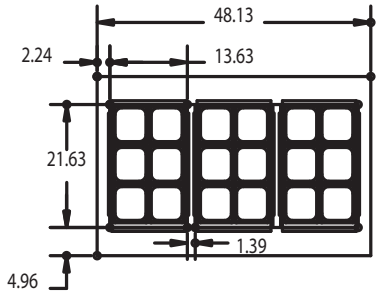

Pan Cutout Configuration

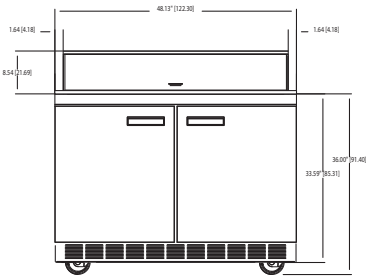

4448N-18M Elevation View

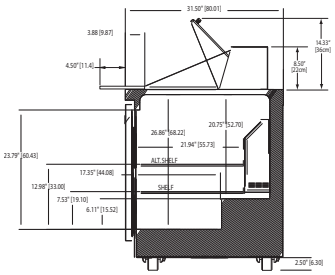

4448N-18M Right Side View

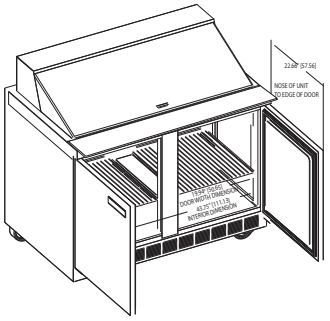

4448N-18M ISO View

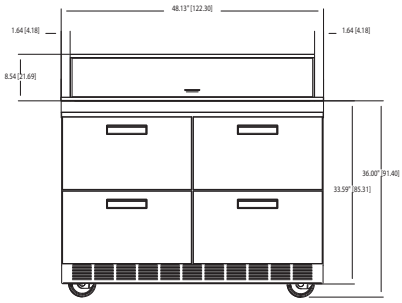

D4448N-18M Elevation View

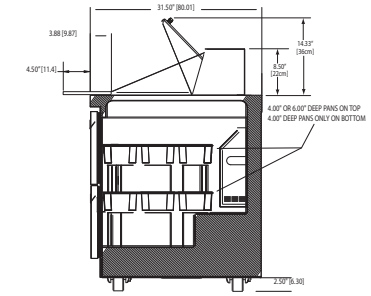

D4448N-18M Right Side View

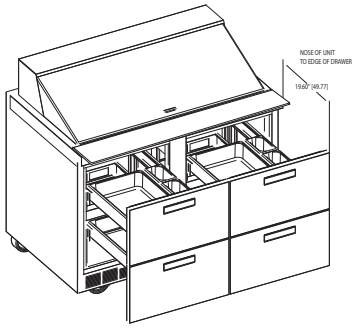

D4448N-18M ISO View

INSTALLATION NOTE:
Refrigeration system is designed so that air will flow under the unit, through the compressor area and out the front of the unit. Any restriction to this air flow path will void the warranties.

Specifications

Model	1/6 Size Pan Cap.	# of Shelves	Shelf Area	Volume	H.P.	V/Hz/Ph	Amps	Nema Plug	Ship Weight
4448N-18M	18	2	5.48ft^2	16.00ft^3	1/5	115/60/1	7.2	5-15P	316lbs/143kg.
D4448N-18M	18	NA	NA	16.00ft^3	1/5	115/60/1	7.2	5-15P	398lbs/181kg

Delfield reserves the right to make changes to the design or specifications without prior notice.

980 S. Isabella Rd.
Mt. Pleasant, Michigan 48858

Phone: 800-733-8948 or 989-773-7981
Fax: 800-669-0619
www.delfield.com

Printed in the U.S.A.
DS4448N-M
03/13

Manitowoc