F5 Serview Drop In

28″ Deep See Through Self-Contained Refrigerated Display Cases

Project _____

Item _____

Quantity _____

CSI Section 11400

Approved _____

Date _____

Models

- F5SC48N 28″ deep self-contained drop in display section
- F5SC72N 28″ deep self-contained drop in display section

F5SC72N

Standard Features

- Display exterior sides are made of 18-gauge stainless steel
- Galvanized steel reinforced ABS plastic interior sides with molded shelf supports
- (4) adjustable epoxy coated wire shelves
- On/off switch for the display section light(s)
- Top mount coil with multiple fans circulating the air throughout the cabinet
- Display section runs off a thermostatic control
- Sliding and removable self-closing 0.50″ thick argon filled, low-E, warm edge insert, thermopane glass doors with left and right vertical gasket
- High density environmentally friendly, Kyoto Protocol Compliant, Non ODP (Ozone Depletion Potential), Non GWP (Global Warming Potential) polyurethane foam throughout unit
- Environmentally friendly HFC-404A refrigerant
- One year parts and 90 day labor standard warranty

Options & Accessories

- 48″ shelf (48″ long units only)
- 72″ shelf (72″ long units only)
- Laminate ends
- 220 volt/50 cycle - inclusion of this option will alter specifications

Specifications

Display section exterior sides are made of 18-gauge stainless steel. Exterior display section top to be 22-gauge galvanized metal. Interior sides are made of galvanized steel reinforced 0.095″ thick ABS plastic with molded shelf supports. The interior bottom is constructed with stainless steel for long lasting durability. Display section is fully insulated with high density environmentally friendly, Kyoto Protocol Compliant, Non ODP (Ozone Depletion Potential), Non GWP (Global Warming Potential) polyurethane foam between the interior and exterior. Four adjustable epoxy coated wire shelves are provided for the display section. An on/off switch for the display section light(s) is located at the right end of the front facing, above the display section doors.

Display case refrigeration system consists of a full-length top mounted coil with multiple fans circulating the air throughout the cabinet utilizing a thermostatic control. An ABS plastic drip pan is placed below the coil with a clear drain hose for running the condensation to the lower base mechanical section.

Front of the display section is equipped with two sliding and removable self-closing 0.50″ thick argon filled, low-e glass doors with a warm edge spacer. The vertical outsides of each door tuck into an extruded channel running vertically up each side. Front and rear nosing to be stainless steel.

Self-contained models have a pre-wired condensing unit housed in a 16-gauge cage hanging form the units exterior bottom. Cage also is supplied with an 8′ cord and plug and electrical junction box. Electrical connections are 115V-60H-1PH.

Refrigeration system components are HFC-404A. Display cabinet blower coil assembly shall have a coated evaporator coil and fans. Interior refrigerated base cabinet and display section to maintain 36˚F to 40˚F temperatures at 100˚F ambient room temperature.

Back has (1) 0.62″ thick argon filled, low-e glass panel.

F5 Serview Drop In: 28″ Deep See Through Self-Contained Refrigerated Display Cases

980 S. Isabella Rd.
Mt. Pleasant, Michigan 48858

Phone: 800-733-8948 or 989-773-7981
Fax: 800-669-0619

www.delfield.com

Delfield

F5 Serview Drop In

28″ Deep See Through Self-Contained Refrigerated Display Cases

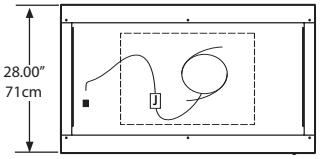

Plan View F5SC48N

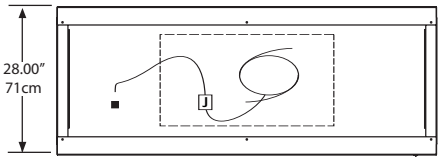

Plan View F5SC72N

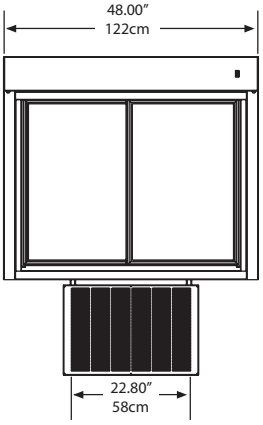

Elevation View F5SC48N

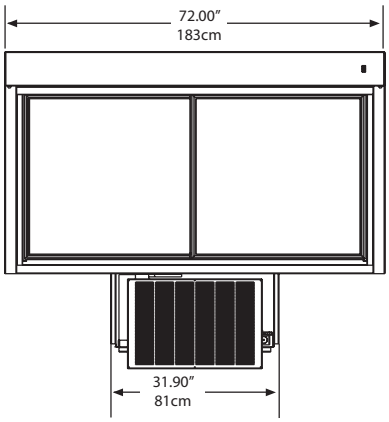

Elevation View F5SC72N

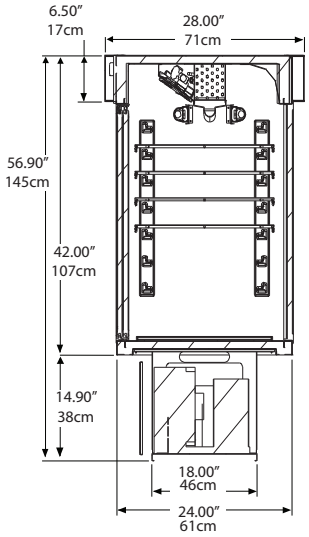

Right End View
F5SC48N

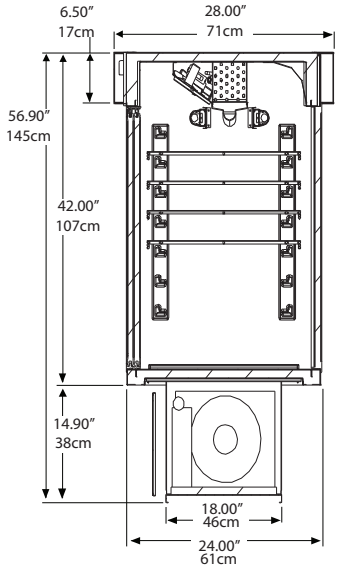

Right End View
F5SC72N

INSTALLATION NOTE:

Model cut-out dimensions:
- 48″ model requires 23.62″ x 18.62″ (60cm x 47cm) cutout
- 72″ model requires 32.62″ x 18.62″ (83cm x 47cm) cutout

Using the supplied louvered panels, refrigeration system is designed so air will flow:
- Front to rear on 48″ models
- Right to left on 72″ models

Louver cut-out dimensions are:
- 22″ by 11″ (56cm x 28cm)

Unobstructed airflow must be maintained to insure unit performance and maintain warranty.

Specifications

Model	Shelf Area	Volume	H.P.	Sys. Cap BTU/Hour	Cabinet Load BTU/Hour	V/Hz/Ph	Amps	Nema Plug	Ship Weight
F5SC48N	20.8ft^2	14.3ft^3	1/2	3160	1802	115/60/1	12.0	5-15P	433lbs/196kg
F5SC72N	32.8ft^2	22.2ft^3	3/4	5758	2708	115/60/1	16.0	5-20P	595lbs/270kg

Delfield reserves the right to make changes to the design or specifications without prior notice.

980 S. Isabella Rd.
Mt. Pleasant, Michigan 48858

Phone: 800-733-8948 or 989-773-7981
Fax: 800-669-0619
www.delfield.com

Printed in the U.S.A.
DSF5SCN
10/12

Manitowoc