Delfield

UC4560N Undercounter

Reduced Height Front-Breathing Self-Contained Undercounter Freezer Bases

Project _____

Item _____

Quantity _____

CSI Section 11400

Approved _____

Date _____

Models

- UC4560N Two section freezer, undercounter with doors

UC4560N

Standard Features

- All 4400 and 4500 Series units are 100% front breathing, which allows the unit to be pushed against a wall or built into a cabinet or an existing line up
- Durable, rugged stainless steel sides, top and front
- Features Delfield's exclusive ABS interior. ABS is extremely durable - it won't dent, chip or corrode and is backed by a limited lifetime warranty
- Heavy duty self-closing hinges
- Environmentally friendly R404A refrigerant
- High density foamed in place environmentally friendly, Kyoto Protocol Compliant, Non ODP (Ozone Depletion Potential), Non GWP (Global Warming Potential) polyurethane keeps energy costs low
- Black recessed quick grip handle
- Standard on 3" casters for easy cleaning and installation
- 115V, 60-cycle single phase electrical system
- 6' cord and plug supplied
- One epoxy coated wire shelf standard, installed per door section
- Electronic control
- Three year parts and labor warranty and an additional two year compressor parts warranty

Options & Accessories

- 18" wide single tier overshelf
- Stainless steel finish on back
- Plastic laminate on front
- Additional wire shelves
- Door lock (solid door models only)
- Exterior thermometer (solid door models only)
- Interior lights*
- 220V/50 Hertz electrical system*

* *Inclusion of this option will alter electrical specifications of the unit*

Specifications

Exterior top is one-piece, 22-gauge stainless steel with integral 2.12" (5.4cm) square nosing on the front.

Exterior back and bottom are two-piece 24-gauge galvanized steel. Exterior ends are stainless steel.

Interior sides are thermoformed ABS plastic with integral shelf supports. Interior back is one-piece 22-gauge stainless steel. Interior bottom and top are thermoformed ABS plastic. Base is fully insulated with high-density foamed in place environmentally friendly, Kyoto Protocol Compliant, Non ODP (Ozone Depletion Potential), Non GWP (Global Warming Potential) polyurethane.

Refrigeration system uses HFC-404A refrigerant. Compressor is 1/3 H.P., with condenser coil and condensate evaporator mounted on rear of the cabinet. Evaporator coils are located on the interior rear wall of the cabinet. Refrigerant flow is controlled by a thermal expansion valve. Cabinet maintains an interior cabinet temperature of -5°F to 0°F (-21°C to -18°C).

Electronic control is located on the exterior back of the cabinet. It allows the unit to maintain consistent temperatures in heavy duty conditions.

Electrical connections are 115 volt, 60 Hertz, single phase. Unit has a 6' (1.8m) long electrical cord and NEMA 5-15P plug.

Casters: Equipment is mounted on 3" (7.6cm) diameter plate casters. Equipment clearance above the floor is 0.82" (2cm).

Doors have a 24-gauge stainless steel exterior, with thermoformed ABS plastic interior liner. Cabinet of door models has one adjustable epoxy-coated wire shelf.

404A REFRIGERANT

980 S. Isabella Rd.
Mt. Pleasant, Michigan 48858

Phone: 800-733-8948 or 989-773-7981
Fax: 800-669-0619

www.delfield.com

Manitowoc

Delfield

UC4560N Undercounter

Reduced Height Front-Breathing Self-Contained Undercounter
Freezer Bases

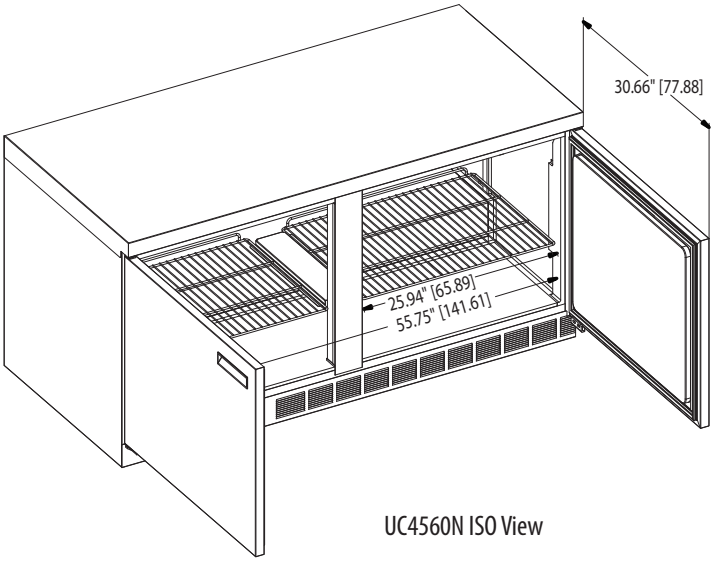

UC4560N ISO View

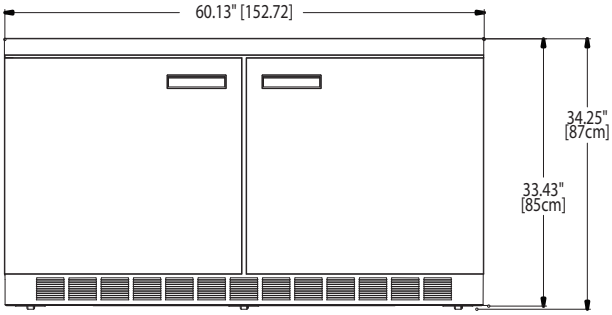

UC4560N Elevation View

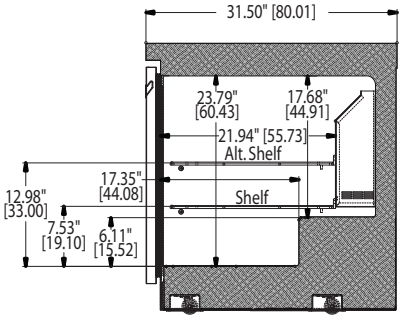

UC4560N Right Side View

INSTALLATION NOTE:
Refrigeration system is designed so that air will flow under the unit, through the compressor area and out the front of the unit. Any restriction to this air flow path will void the warranties.

Specifications

Model	# of Shelves	Shelf Area	Volume	H.P.	V/Hz/Ph	Amps	Nema Plug	Ship Weight	Energy KWH/Day
UC4560N	2	7.19ft^2	16.9ft^3	1/3	115/60/1	12.0	5-15P	411lbs/186kg	7.40

Delfield reserves the right to make changes to the design or specifications without prior notice.

980 S. Isabella Rd.
Mt. Pleasant, Michigan 48858

Phone: 800-733-8948 or 989-773-7981
Fax: 800-669-0619
www.delfield.com

Printed in the U.S.A.
DSUC4560N
03/13

Manitowoc