F5 Serview Drop In

32″ Deep Mirrored Remote Refrigerated Display Cases

Project _____

Item _____

Quantity _____

CSI Section 11400

Approved _____

Date _____

Models

- F5MR48D 32″ deep remote drop in display section
- F5MR72D 32″ deep remote drop in display section

F5MR72D

Standard Features

- Display exterior sides are made of 18-gauge stainless steel
- Galvanized steel reinforced ABS plastic interior sides with molded shelf supports
- (4) adjustable epoxy coated wire shelves
- On/off switch for the display section light(s)
- Top mount coil with multiple fans circulating the air throughout the cabinet
- Display section runs off a thermostatic control
- Sliding and removable self-closing 0.50″ thick argon filled, low-E, warm edge insert, thermopane glass doors with left and right vertical gasket
- High density environmentally friendly, Kyoto Protocol Compliant, Non ODP (Ozone Depletion Potential), Non GWP (Global Warming Potential) polyurethane foam throughout unit
- Single service display section with mirrored back
- Environmentally friendly HFC-404A refrigerant
- One year parts and 90 day labor standard warranty

Options & Accessories

- 48″ shelf (48″ long units only)
- 72″ shelf (72″ long units only)
- Stainless steel back
- Laminate ends
- 220 volt/50 cycle - inclusion of this option will alter specifications

Specifications

Display section exterior sides are made of 18-gauge stainless steel. Exterior display section top to be 22-gauge galvanized metal. Interior sides are made of galvanized steel reinforced 0.095″ thick ABS plastic with molded shelf supports. The interior bottom is constructed with stainless steel for long lasting durability. Display section is fully insulated with high density environmentally friendly, Kyoto Protocol Compliant, Non ODP (Ozone Depletion Potential), Non GWP (Global Warming Potential) polyurethane foam between the interior and exterior. (4) Adjustable epoxy coated wire shelves are provided for the display section. An on/off switch for the display section light(s) is located at the right end of the front facing, above the display section doors.

Display case refrigeration system consists of a full-length top mounted evaporator coil with multiple fans circulating the air throughout the cabinet utilizing a thermostatic control. Refrigeration lines are piped to a single point connection with expansion valve. An ABS plastic drip pan is placed below the coil with a clear drain hose for running the condensation to the lower base mechanical section.

Front of the display section is equipped with two sliding and removable self-closing 0.50″ thick argon filled, low-e glass doors with a warm edge spacer. The vertical outsides of each door tuck into an extruded channel running vertically up each side. Front nosing to be stainless steel.

Refrigeration system components are HFC-404A. Display cabinet blower coil assembly shall have a coated evaporator coil and fans. Interior refrigerated base cabinet and display section to maintain 36˚F to 40˚F temperatures at 100˚F ambient room temperature. Electrical connections are 115V-60H-1PH; unit must be hard wired to a junction box.

Back has 2″ thick panel, constructed on 22-gauge stainless steel interior, 2″ of high-density polyurethane foam and 22-gauge galvanized steel exterior. Interior of back panel has (2) angled glass mirrors.

404A REFRIGERANT

F5 Serview Drop In: 32″ Deep Mirrored Remote Refrigerated Display Cases

980 S. Isabella Rd.
Mt. Pleasant, Michigan 48858

Phone: 800-733-8948 or 989-773-7981
Fax: 800-669-0619

www.delfield.com

Delfield

F5 Serview Drop In

32" Deep Mirrored Remote Refrigerated Display Cases

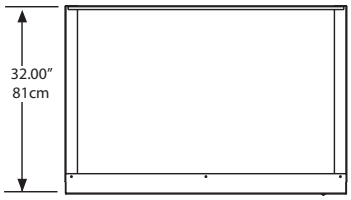

Plan View F5MR48D

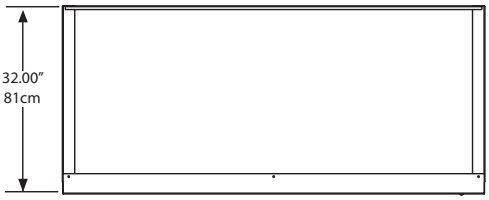

Plan View F5MR72D

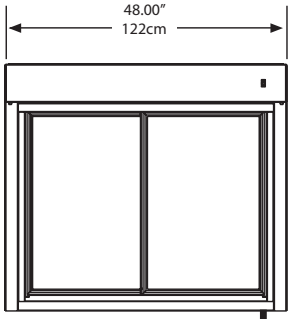

Elevation View F5MR48D

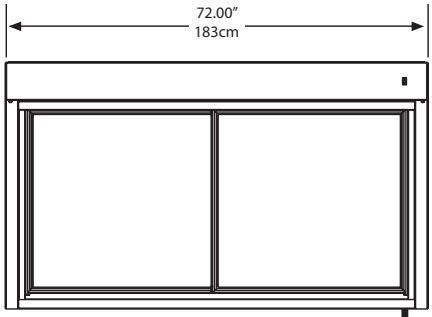

Elevation View F5MR72D

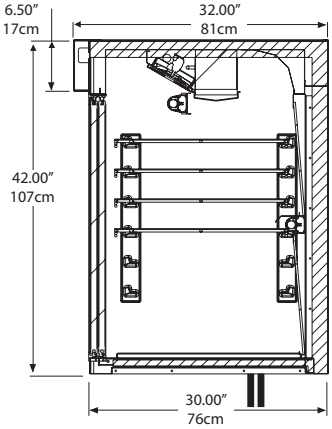

Right End VIew
F5MR48D, F5MR72D

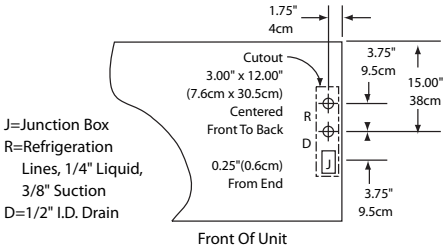

Mechanical Access
Remote Models

Specifications

Model	Shelf Area	Volume	H.P.*	Evap Cap BTU/°TD	Cabinet Load BTU/Hour	V/Hz/Ph	Amps	Nema Plug	Ship Weight
F5MR48D	26.0ft^2	19.0ft^3	1/2	150	1215	115/60/1	4.0	NA	485lbs/220kg
F5MR72D	40.5ft^2	29.4ft^3	3/4	450	1783	115/60/1	4.0	NA	644lbs/292kg

* Recommended

Delfield reserves the right to make changes to the design or specifications without prior notice.

980 S. Isabella Rd.
Mt. Pleasant, Michigan 48858

Phone: 800-733-8948 or 989-773-7981
Fax: 800-669-0619
www.delfield.com

Printed in the U.S.A.
DSF5MRD
10/12

Manitowoc